Polo Estate 1998 ➤

General body repairs, interior

Edition 03.2005

Protected by copyright. Copying for private or commercial purposes, in part or in whole, is not permitted unless authorised by Volkswagen AG. Volkswagen AG does not guarantee or accept any liability with respect to the correctness of information in this document. Copyright by Volkswagen AG.

satelettronica

List of Workshop Manual Repair GroupsList of Workshop Manual Repair GroupsList of Workshop Manual Repair Groups

Polo Estate 1998 ➤

General body repairs, interior

Repair Group

68 - Interior equipment

69 - Passenger protection

70 - Trim/Insulation

72 - Seat frames

74 - Seats - Upholstery, Covers

Protected by copyright. Copying for private or commercial purposes, in part or in whole, is not permitted unless authorised by Volkswagen AG. Volkswagen AG does not guarantee or accept any liability with respect to the correctness of information in this document. Copyright by Volkswagen AG.

satelettronica

Technical information should always be available to the foremen and mechanics, because their careful and constant adherence to the instructions is essential to ensure vehicle road-worthiness and safety. In addition, the normal basic safety precautions for working on motor vehicles must, as a matter of course, be observed.

All rights reserved.
No reproduction without prior agreement from publisher.

Copyright © 2011 Volkswagen AG, Wolfsburg

00056407120

Contents

68 - Interior equipment 1
1 Interior mirror 1
1.1 Interior mirror 1
1.2 Automatic anti-dazzle interior mirror 1
1.3 Removing interior mirror 3
1.4 Installing interior mirror 3
1.5 Bonding retaining plate for interior mirror 3
1.6 Removing and installing interior mirror (with rain sensor) 5
1.7 Bonding on interior mirror base with rain sensor 5
2 Compartments, covers and trim 7
2.1 Compartments, covers and trim 7
2.2 Removing and installing centre console (Caddy, Polo Classic > 09.99, Polo Estate > 09.99) 7
2.3 Removing and installing centre console (Polo Classic 10.99 >, Polo Estate 10.99 >) 9
2.4 Removing handbrake lever grip and trim (Caddy, Polo Classic > 09.99, Polo Estate > 09.99) 13
2.5 Removing handbrake lever hand grip (Polo Classic 10.99 >, Polo Estate > 10.99) 14
2.6 Removing and installing driver's side compartment (Caddy, Polo Classic > 09.99, Polo Estate > 09.99) 15
2.7 Removing driver's side compartment (Polo Classic 10.99 >, Polo Estate 10.99 >) 17
2.8 Removing driver's side footwell cover 18
2.9 Removing front passenger's compartment (Caddy, Polo Classic > 09.99, Polo Estate > 09.99) 18
2.10 Removing glove box (Caddy, Polo Classic > 09.99, Polo Estate > 09.99) 19
2.11 Removing glove box (Polo Classic 10.99 >, Polo Estate 10.99 >) 20
2.12 Removing dash panel insert trim (Caddy, Polo Classic > 09.99, Polo Estate > 09.99) 21
2.13 Removing dash panel insert trim (Polo Classic 10.99 >, Polo Estate 10.99 >) 21
2.14 Removing sun visor 22
2.15 Removing and installing stowage compartment in front of roof headliner (Caddy) 23
3 Grab handle 24
3.1 Grab handle 24
3.2 Removing hand hold (roof) 24
4 Sill panel trims 25
4.1 Sill panel trims 25
4.2 Removing and installing inner sill panel trim 25
5 Luggage compartment cover 26
5.1 Luggage compartment cover 26
5.2 Removing and installing load area cover (Polo Estate) 26
5.3 Removing and installing load area floor (Polo Estate) 28

69 - Passenger protection 29
1 Seat belts 29
1.1 Seat belts 29
1.2 Safety regulations for belt tensioners 29
1.3 Checking belt tensioner 29
1.4 Removing and installing front seat belts with belt tensioning system (Caddy, Polo Classic > 09.99, Polo Estate > 09.99) 30
1.5 Removing and installing front seat belts with belt tensioning system (Polo Classic 10.99 >, Polo Estate 10.99 >) 33
1.6 Removing and installing belt height adjustment fittings (Caddy, Polo Classic > 09.99, Polo Estate > 09.99) 36
1.7 Removing and installing belt height adjustment fittings (Polo Classic 10.99 >, Polo Estate 10.99 >) 37
1.8 Removing front fittings 38
1.9 Removing front belt latch 38

satelettronica

1.10 Removing and installing rear seat belts 39
1.11 Removing and installing rear inertia reel (Caddy) 41
1.12 Removing and installing rear inertia reel (Polo Classic) 43
1.13 Removing and installing rear inertia reel (Polo Estate) 45
1.14 Removing and installing lap belt and double latch 47

2 Inspecting seat belts 47
2.1 Inspecting seat belts 47

3 Airbag 51
3.1 Airbag 51
3.2 Tools 51
3.3 Locations overview (Caddy, Polo Classic 09.99 >, Polo Estate > 09.99) 52
3.4 Locations overview (Polo Classic 10.99 >, Polo Estate 10.99 >) 54
3.5 Safety precautions when working on the airbag 55
3.6 Replacing airbag units following an accident 56
3.7 Removing and installing driver's airbag unit (Caddy, Polo Classic > 09.99, Polo Estate > 09.99) 57
3.8 Removing and installing driver's airbag unit (Polo Classic 10.99 >, Polo Estate 10.99 >) . . 59
3.9 Removing and installing steering wheel (Caddy, Polo Classic > 09.99, Polo Estate > 09.99) 63
3.10 Removing and installing steering wheel (Polo Classic 10.99>, Polo Estate 10.99 >) 64
3.11 Removing and installing coil connector with slip ring (Caddy, Polo Classic > 09.99, Polo Estate > 09.99) 66
3.12 Removing and installing coil connector with slip ring (Polo Classic 10.99>, Polo Estate 10.99>) 67
3.13 Removing and installing front passenger's airbag unit (Caddy, Polo Classic > 09.99, Polo Estate > 09.99) 69
3.14 Removing and installing front passenger's airbag unit (Polo Classic 10.99 >, Polo Estate 10.99 >) 72
3.15 Removing and installing airbag control unit (J 234) 75
3.16 Removing and installing driver's/front passenger's side airbag 76
3.17 Removing and installing sensor for driver's/front passenger's side airbag 79

70 - Trim/Insulation 82

1 Dash panel 82
1.1 Dash panel 82
1.2 Tools 82
1.3 Removing dash panel (Caddy, Polo Classic > 09.99, Polo Estate > 09.99) 83
1.4 Removing and installing dash panel (Polo Classic 10.99 >, Polo Estate 10.99 >) 88

2 Door trim 95
2.1 Door trim 95
2.2 Tools 95
2.3 Front door trim - assembly overview 96
2.4 Removing and installing front door trim 99
2.5 Rear door trim - Assembly overview (Caddy) 102
2.6 Rear door trim - Assembly overview (Polo Classic, Polo Estate) 104
2.7 Removing and installing rear door trim (Polo Classic, Polo Estate) 106
2.8 Removing and installing door insulation sheeting 108

3 Pillars and side trims 110
3.1 Pillars and side trims 110
3.2 Removing and installing A pillar trim 110
3.3 Removing and installing B pillar upper trim (Caddy) 112
3.4 Removing and installing side trim (Caddy) 114
3.5 Removing and installing B pillar trim (Polo Classic, Polo Estate) 116
3.6 Removing and installing C and D pillar trim (Polo Classic) 119
3.7 Removing and installing C pillar lower trim (Polo Classic) 122
3.8 Removing and installing C pillar upper trim (Polo Estate) 124
3.9 Removing and installing C pillar lower trim (Polo Estate) 126
3.10 Removing and installing D pillar trim (Polo Estate) 128

Protected by copyright. Copying for private or commercial purposes, in part or in whole, is not permitted unless authorised by Volkswagen AG. Volkswagen AG does not guarantee or accept any liability with respect to the correctness of information in this document. Copyright by Volkswagen AG.

sateletronica

4 Tailgate/boot lid trim . . . 130
4.1 Tailgate/boot lid trim . . . 130
4.2 Removing and installing boot lid trim (Polo Classic) . . . 130
4.3 Removing and installing tailgate trim (Polo Estate) . . . 131

5 Load area/luggage compartment trim . . . 132
5.1 Load area/luggage compartment trim . . . 132
5.2 Removing and installing - load area trim (Caddy) . . . 132
5.3 Removing and installing luggage compartment floor trim (Polo Classic) . . . 133
5.4 Removing and installing luggage compartment side trim (Polo Classic) . . . 134
5.5 Removing and installing rear lock carrier cover (Polo Classic) . . . 136
5.6 Removing and installing rear shelf (Polo Classic) . . . 138
5.7 Removing and installing rear lock carrier cover (Polo Estate) . . . 139
5.8 Removing and installing load area side panel trim (Polo Estate) . . . 140

6 Roof trim . . . 142
6.1 Roof trim . . . 142
6.2 Removing and installing front moulded headlining (Caddy) . . . 142
6.3 Removing and installing rear moulded headlining (Caddy) . . . 144
6.4 Removing and installing moulded headliner (Polo Classic, Polo Estate) . . . 145
6.5 Removing and installing moulded headliner with sliding/tilting sun roof (Polo Classic, Polo Estate) . . . 150

72 - Seat frames . . . 156

1 Front seat . . . 156
1.1 Front seat . . . 156
1.2 Tools . . . 156
1.3 Removing seat . . . 156
1.4 Removing and installing front seat with side airbag . . . 157
1.5 Front bearing for folding front seat (Caddy) - Assembly overview . . . 160
1.6 Removing and installing backrest . . . 162
1.7 Seat frame - Assembly overview . . . 166
1.8 Folding seat frame (Caddy) - Assembly overview . . . 168
1.9 Removing and installing cable for releasing folding seat (Caddy) . . . 170
1.10 Removing pull loop . . . 171
1.11 Backrest frame - Assembly overview . . . 172

2 Rear seat . . . 173
2.1 Rear seat . . . 173
2.2 Removing seat and backrest (split) (Caddy) . . . 173
2.3 Removing seat and backrest (split) (Polo Classic, Polo Estate) . . . 174

74 - Seats - Upholstery, Covers . . . 176

1 Front seat cover and padding . . . 176
1.1 Front seat cover and padding . . . 176
1.2 Removing and installing cover and padding for front seat cushion . . . 176
1.3 Removing and installing front backrest cover and padding (Caddy) . . . 181
1.4 Removing and installing front backrest cover and padding (Polo Classic, Polo Estate) . . . 186

2 Rear seat cushion cover and padding . . . 191
2.1 Rear seat cushion cover and padding . . . 191
2.2 Removing and installing cover and padding for rear seat (one-piece) . . . 191
2.3 Removing and installing cover and padding for backrest (one-piece) . . . 192
2.4 Removing and installing cover and padding for seat (split) . . . 194
2.5 Removing and installing covers and padding for backrest (split) . . . 195

Protected by copyright. Copying for private or commercial purposes, in part or in whole, is not permitted unless authorised by Volkswagen AG. Volkswagen AG does not guarantee or accept any liability with respect to the correctness of information in this document. Copyright by Volkswagen AG.
satelettronica

Protected by copyright. Copying for private or commercial purposes, in part or in whole, is not permitted unless authorised by Volkswagen AG. Volkswagen AG does not guarantee or accept any liability with respect to the correctness of information in this document. Copyright by Volkswagen AG.

satelettronica

68 - Interior equipment

1 - Interior mirror

1.1 - Interior mirror

1.2 - Automatic anti-dazzle interior mirror

The automatic anti-dazzle interior mirror darkens infinitely when the driver is "blinded" from behind.

It consists of a mirror element and an electrics with two photo sensors.

The electronics recognise the light incidence from the front and the rear through the photo sensors.

If the light incidence is greater from the rear than from the front the electronics apply voltage to the conductive coating.

The applied voltage changes the colour of the electrolyte. The greater the voltage the darker the electrolyte. Therefore the light incidence is reflected to a lesser degree.

When selecting the reverse gear the anti-dazzle function is switched off and one can use the mirror to e.g. reverse out of a dark garage.

Protected by copyright. Copying for private or commercial purposes, in part or in whole, is not permitted unless authorised by Volkswagen AG. Volkswagen AG does not guarantee or accept any liability with respect to the correctness of information in this document. Copyright by Volkswagen AG.

satelettronica

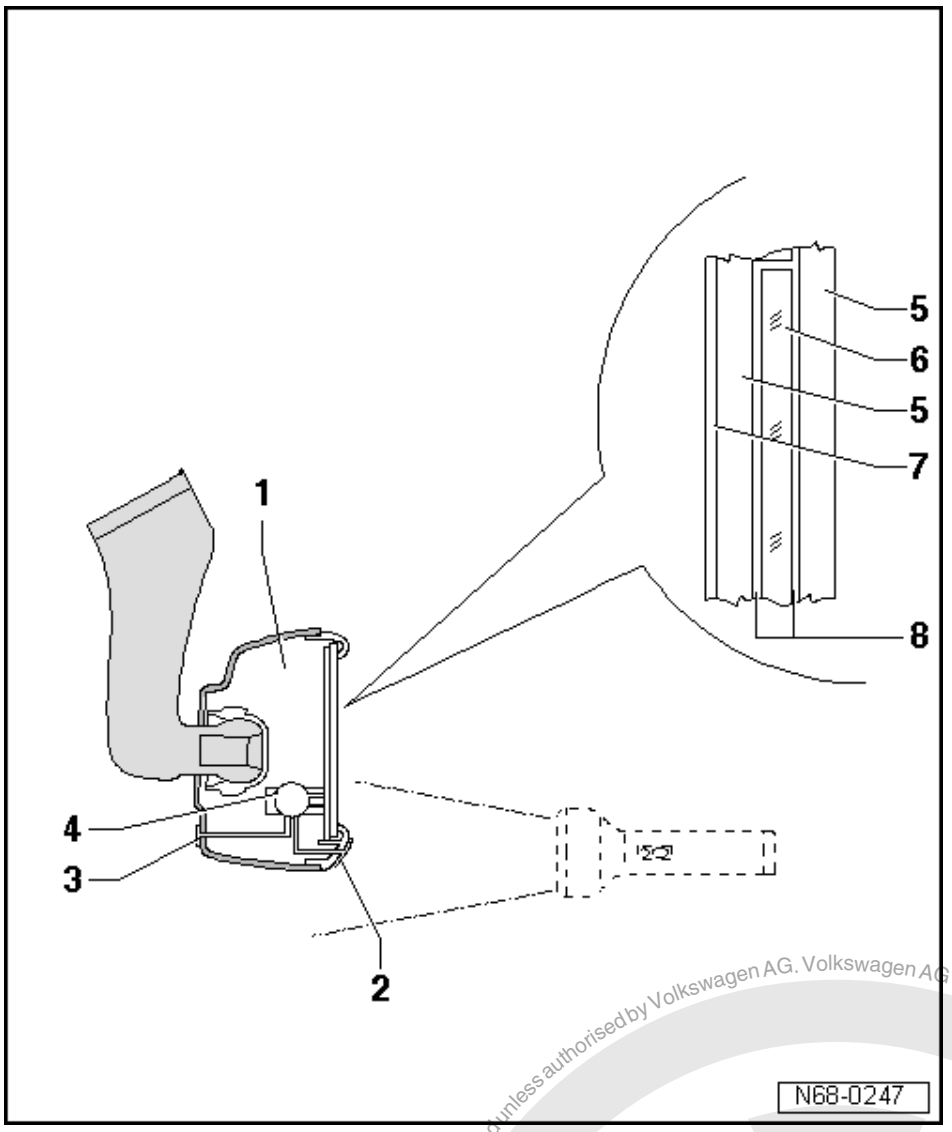

1 Interior mirror
- Checking function: Switch ignition on. Cover photo sensor - 3 - and shine a hand torch at photo sensor - 2 -, the mirror must darken when doing this (reverse gear must not be engaged).

2 Photo sensor

3 Photo sensor

4 Electronics

5 Glass pane

6 Electrolyte coating

7 Silver reflective coating

8 Conductive coating

Protected by copyright. Copying for private or commercial purposes, in part or in whole, is not permitted unless authorised by Volkswagen AG. Volkswagen AG does not guarantee or accept any liability with respect to the correctness of information in this document. Copyright by Volkswagen AG.
satelettronica

1.3 - Removing interior mirror

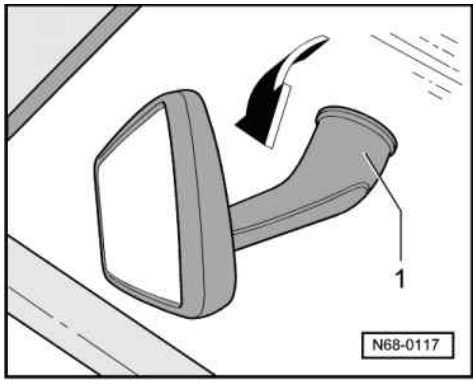

- -> Press interior rear-view mirror -1- downward at an angle off retaining plate (spring clip in mirror base).

1.4 - Installing interior mirror

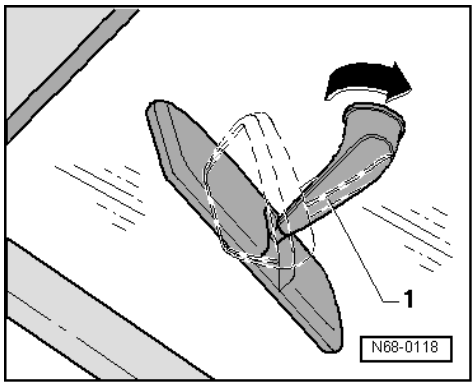

- -> When installing, place mirror -1- in position, turned 60...90°,to mounted position and turn until locking spring clicks into place.

1.5 - Bonding retaining plate for interior mirror

Materials:

- Glass-metal adhesive kit D 000 703 A1

satelettronica
Protected by copyright. Copying for private or commercial purposes, in part or in whole, is not permitted unless authorised by Volkswagen AG. Volkswagen AG does not guarantee or accept any liability with respect to the correctness of information in this document. Copyright by Volkswagen AG.

-> Tools:

1 - Glass scraper (commercially available)
2 - Blade (commercially available)

- Take mirror plate out from mirror base.
- Remove PUR adhesive from mirror base with a wire brush.
- Grind off three spacer protrusions on bonding surface. To do this, use sandpaper (360/400 grain) on flat surface.
- Keep sanded surface clean and free of grease.
- Scrape down PUR adhesive material and primer down to ceramic layer on windscreen using glass scraper.
- Clean bonding area with adhesive remover D 002 000 10 or cleaning solution D 009 401 04.

Warning! Do not damage ceramic coating. Scratches will remain permanently visible.

- Cut nylon mesh fabric exactly to the size of the mirror base.

Note:

Wear hand protection (rubber glove).

- Apply adhesive evenly and smoothly to base of mirror.
- Fit nylon mesh fabric onto base of mirror.
- Apply further adhesive to nylon mesh fabric by dabbing with the tube.

30 seconds are available from applying the adhesive to the nylon mesh fabric to pressing it onto the windscreen.

- Press base of mirror firmly (do not use force) against windscreen for 15 seconds.
- Remove excess adhesive with a cloth.

Note:

Interior mirror can be fitted after 15 minutes.

Protected by Copyright. Copying for private or commercial purposes, in part or whole, is not permitted unless authorised by Volkswagen AG. Volkswagen AG does not guarantee or accept any liability with respect to the correctness of information in this document. Copyright by Volkswagen AG.
satelettronica

1.6 - Removing and installing interior mirror (with rain sensor)

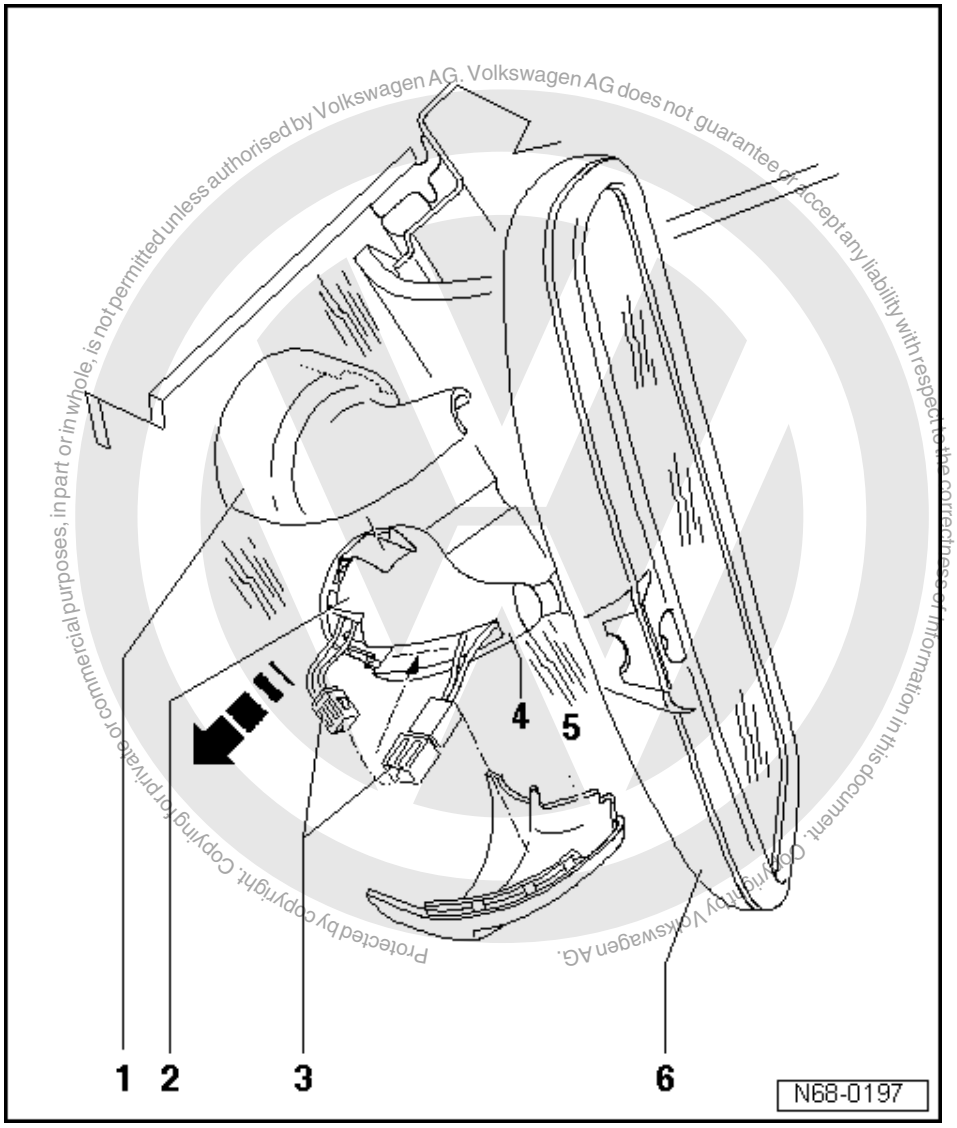

Protected by copyright. Copying for private or commercial purposes, in part or in whole, is not permitted unless authorised by Volkswagen AG. Volkswagen AG does not guarantee or accept any liability with respect to the correctness of information in this document. Copyright by Volkswagen AG.

satelettronica

Removing

- Press left -1- and right -5- covers apart and take off.
- Pull connectors -3- out from mirror base -4- and separate.
- Pull mirror base -4- with mirror -6-downwards off retaining plate -2- -arrow-.

Installing

Install in reverse order.

1.7 - Bonding on interior mirror base with rain sensor

Using the subsequent repair procedure the old method of removing the windscreen is no longer a requirement.

At the same time it is also possible to reuse the old mirror base which has fallen off.

Preparing windscreen

- All remains of the adhesive and primer must be removed from the ceramic pre-coating.

- Clean adhesive surface with cleaning solution D 009 401 04.
- Adhere to flash-off period of at least10 minutes.
- Apply glass/paint primer D 009 200 02.
- Flash-off period up to bonding: Minimum10 minutes to maximum of 1 hour.

Preparing the detached or new mirror base

- Mechanically remove adhesive remains (valid only for a mirror base which has become detached).
- Prepare adhesive surface by sanding down with wet fine emery paper (grade 800-1200) until water remains (does not run off) on adhesive surface.
- Then clean with cleaning solution D 009 401 04.

Bonding mirror base on

- Apply 2K polyurethane adhesive D 180 KD2 A1 direct to prepared and cleaned mirror base adhesive surface.
- Adhesive bead diameter: Approx. 2.5...3 mm.
- Press mirror base into position on prepared windscreen immediately after applying adhesive to base.
- Align mirror base in position on ceramic pre-coat surface and secure with adhesive tape.

Cleaning and removing excessive adhesive

- Carefully remove adhesive tape after 0.5...1 hour after attaching mirror base.
- Carefully remove the excessive but still soft adhesive with aid of a spatula.
- Then remove the excessive adhesive completely using a cloth or primer applicator soaked in cleaning solution.

Installing rain sensor and mirror

- The mirror can be fitted 2.5 hours after attaching the mirror base.

Protected by copyright. Copying for private or commercial purposes, in part or in whole, is not permitted unless authorised by Volkswagen AG. Volkswagen AG does not guarantee or accept any liability with respect to the correctness of information in this document. Copyright by Volkswagen AG.

satelettronica

2 - Compartments, covers and trim

2.1 - Compartments, covers and trim

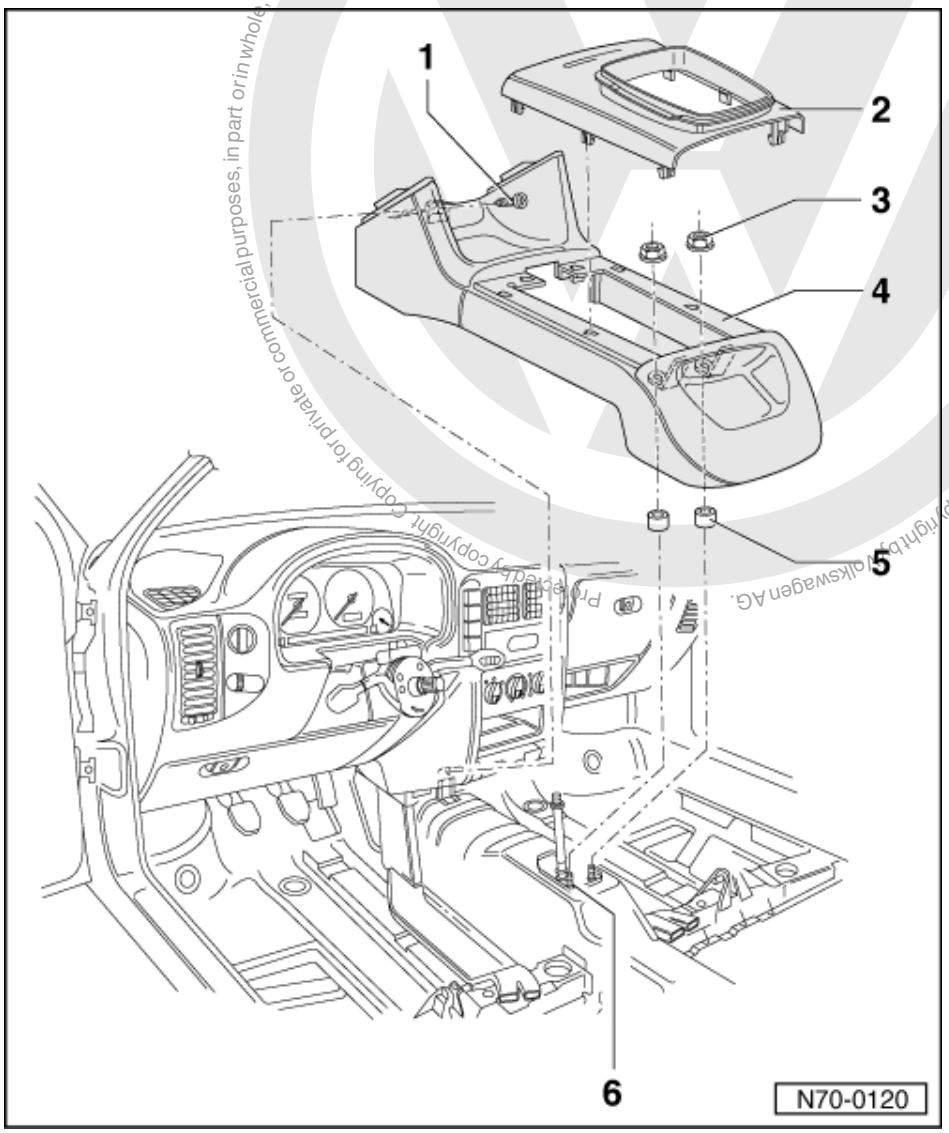

2.2 - Removing and installing centre console (Caddy, Polo Classic > 09.99, Polo Estate > 09.99)

1 Cross-head screw
- 1.5 Nm

2 Cover
- Clipped

3 Hexagon nut
- 2 Nm

4 Centre console
- Removing:
- Unclip cover - 2 - and take off upwards.
- Remove hexagon nuts - 3 -.
- Remove cross-head screw - 1 -.

Protected by copyright. Copying for private or commercial purposes, in part or in whole, is not permitted unless authorised by Volkswagen AG. Volkswagen AG does not guarantee or accept any liability with respect to the correctness of information in this document. Copyright by Volkswagen AG.

satelettronica

- Lift centre console rear of threaded pins - 6 - and take off gearstick

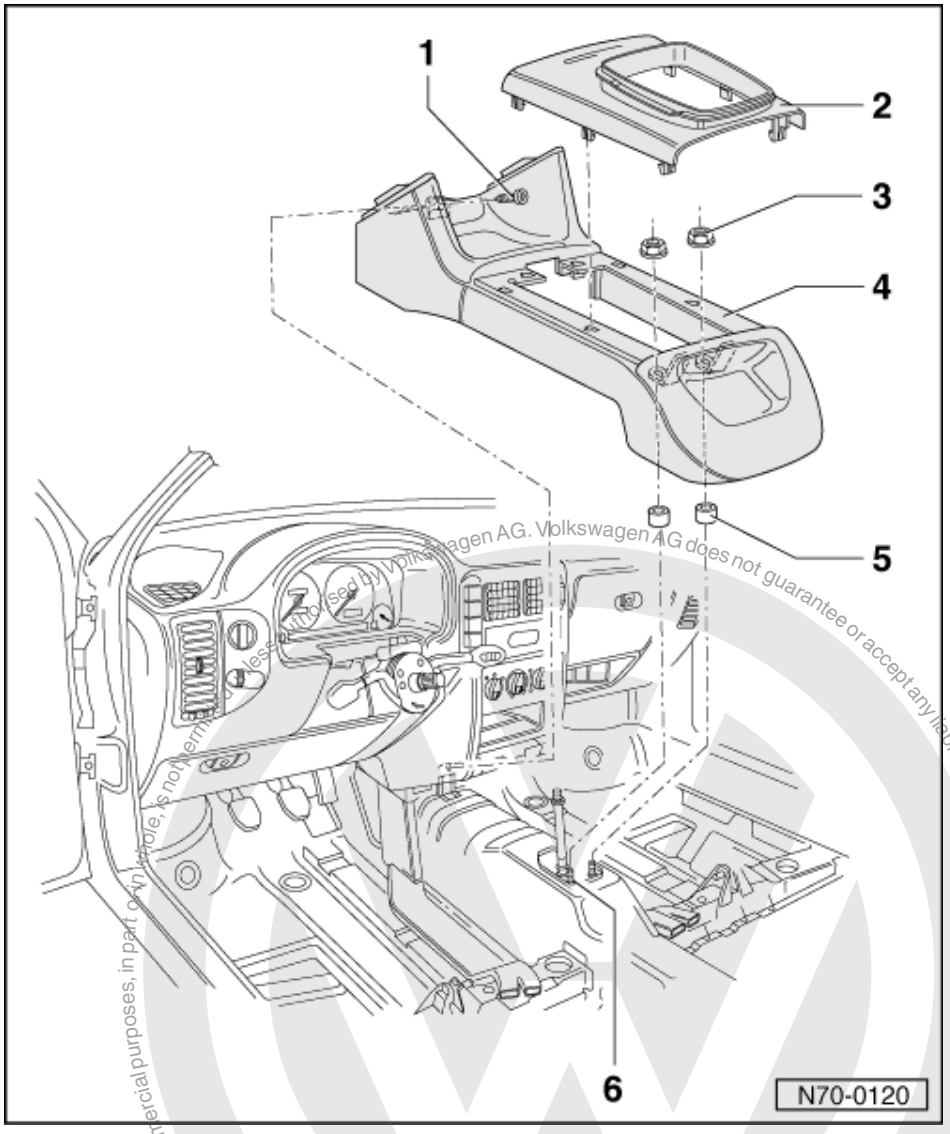

◆ Installing:
- Place spacer sleeves - 5 - on threaded pins - 6 -.
- Fit centre console and secure with cross-head screws and hexagon nuts - 3 -.

5 Spacer sleeve

6 Threaded pin

Protected by copyright. Copying for private and commercial purposes, in part or in whole, is not permitted unless authorised by Volkswagen AG. Volkswagen AG does not guarantee or accept any liability with respect to the correctness of information in this document. Copyright by Volkswagen AG.
satelettronica

2.3 - Removing and installing centre console (Polo Classic 10.99 >, Polo Estate 10.99 >)

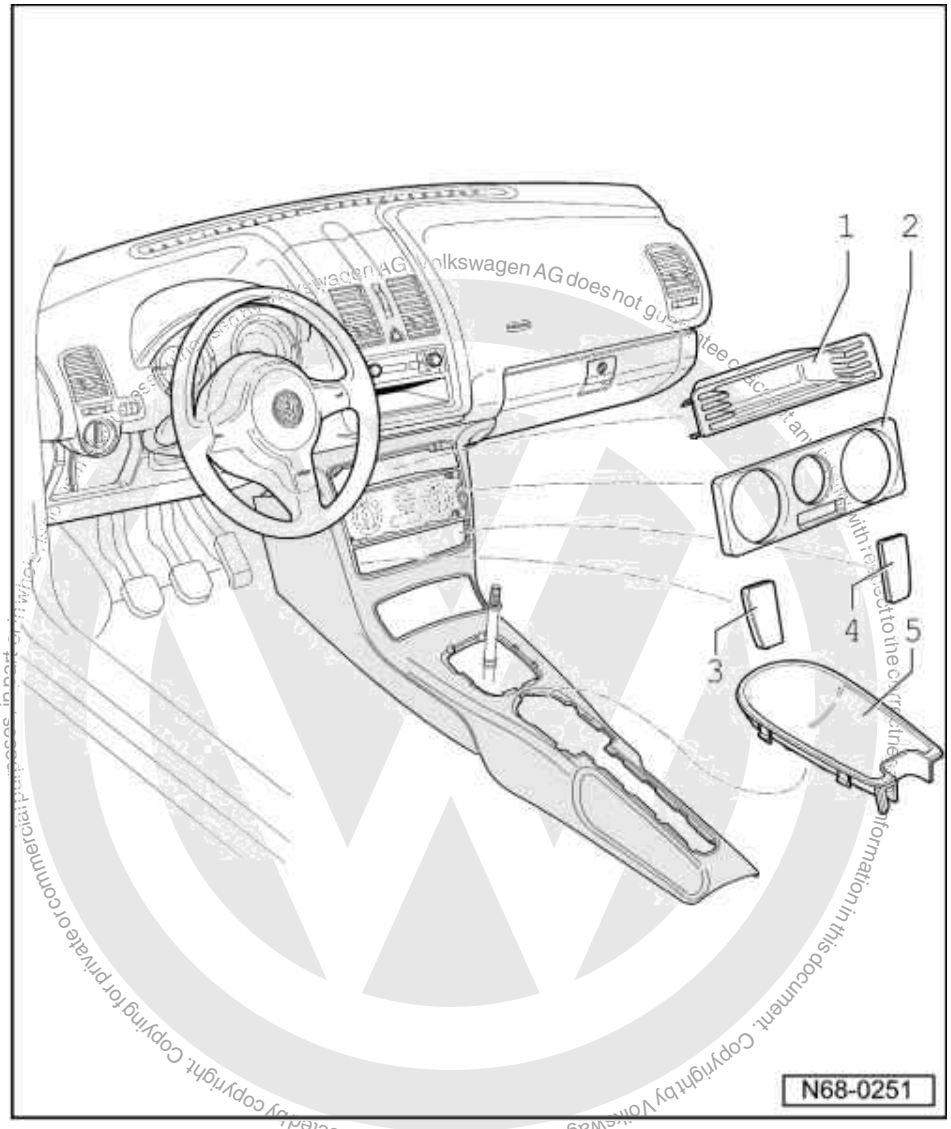

Notes:

- The removal and installation procedures may have to be modified slightly depending on equipment variants.

Removing

- Removing driver's side stowage compartment => Page 17 .
- Unclip coin box -1-, cover cap left -3- and cover cap right -4-.
- Unclip trim -2-.
- Unclip handbrake frame -5-.

Note:

- It is not necessary to remove the gear stick knob and boot to remove the centre console. For a better representation they are not shown in the illustration.

satelettronica

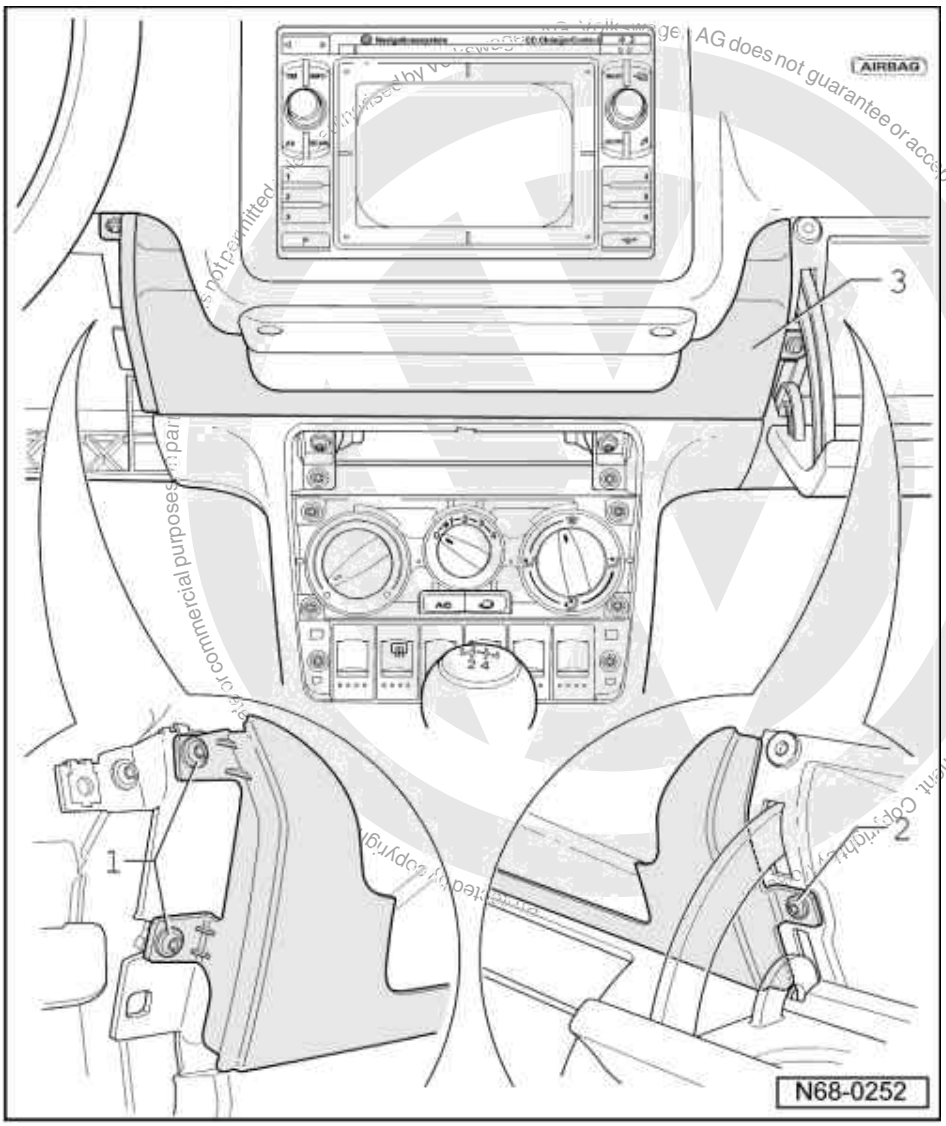

- Remove two screws -1-.
- Open glove box and remove screw -2-.
- Remove trim panel -3-.

satelettronica

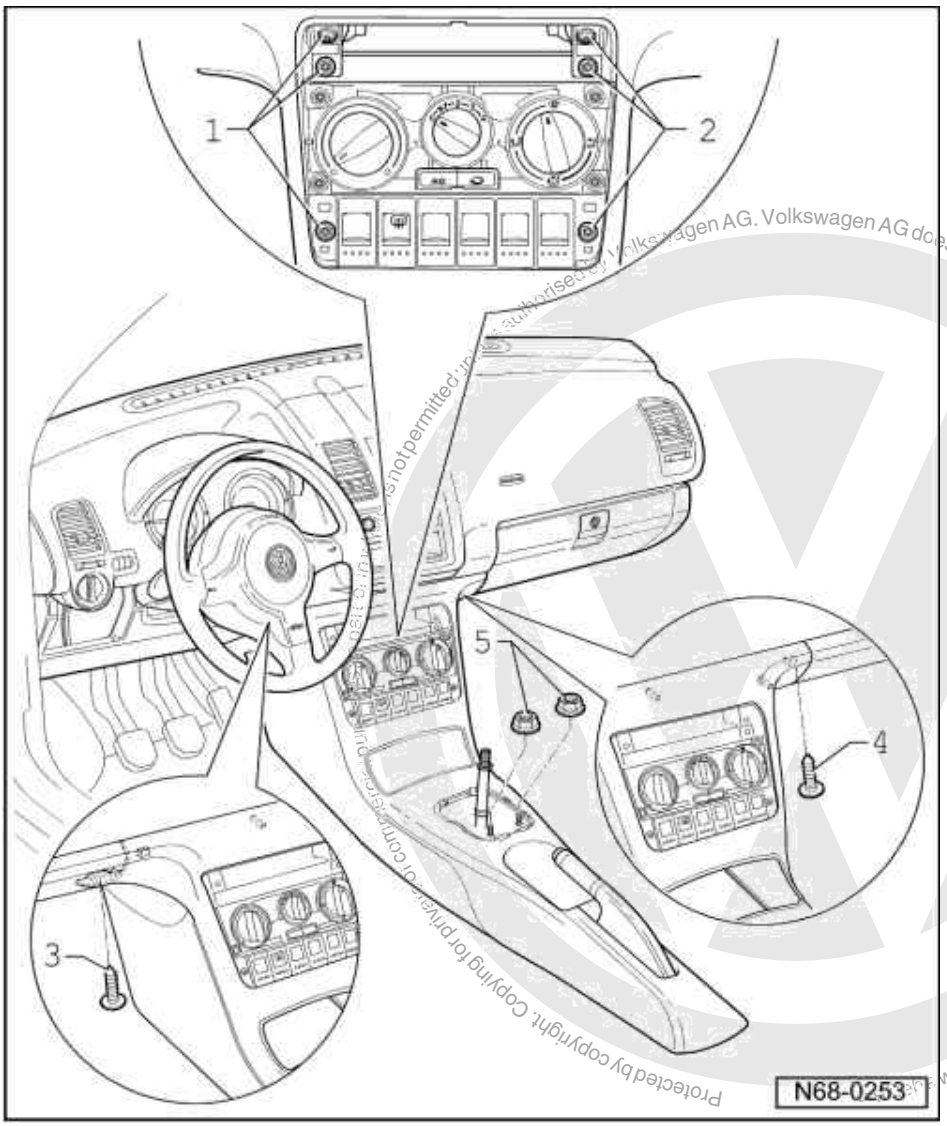

- Remove self-tapping screws -1- and -2- (Qty. 3 each).
- Remove screw -3-.
- Remove screw -4-.
- Remove hexagon nuts -3-.

Protected by copyright. Copying for private or commercial purposes, in part or in whole, is not permitted unless authorised by Volkswagen AG. Volkswagen AG does not guarantee or accept any liability with respect to the correctness of information in this document. Copyright by Volkswagen AG.
satelettronica

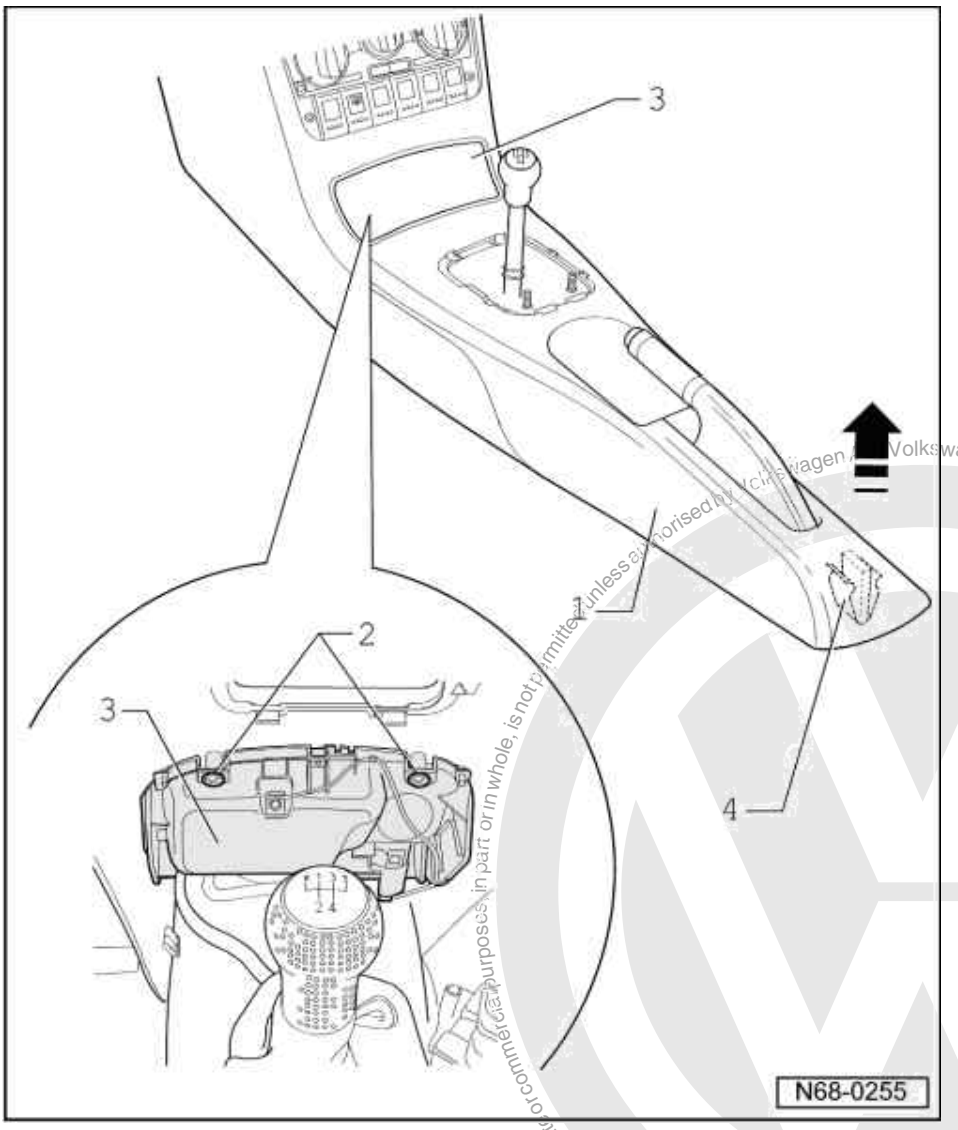

Note:

- The centre console -1- is secured with a clip -4- at the rear on the tunnel.

- Unclip centre console -1- at rear and swing up in direction of arrow.
- Remove screws -2- and remove ashtray -3- from the centre console.
- Take out centre console.

Volkswagen AG does not guarantee or accept any liability with respect to the correctness of information in this document. Copyright by Volkswagen AG.
Protected by copyright. Copying for private or commercial purposes, in part or in whole, is not permitted unless authorised by Volkswagen AG.
satelettronica

2.4 - Removing handbrake lever grip and trim (Caddy, Polo Classic > 09.99, Polo Estate > 09.99)

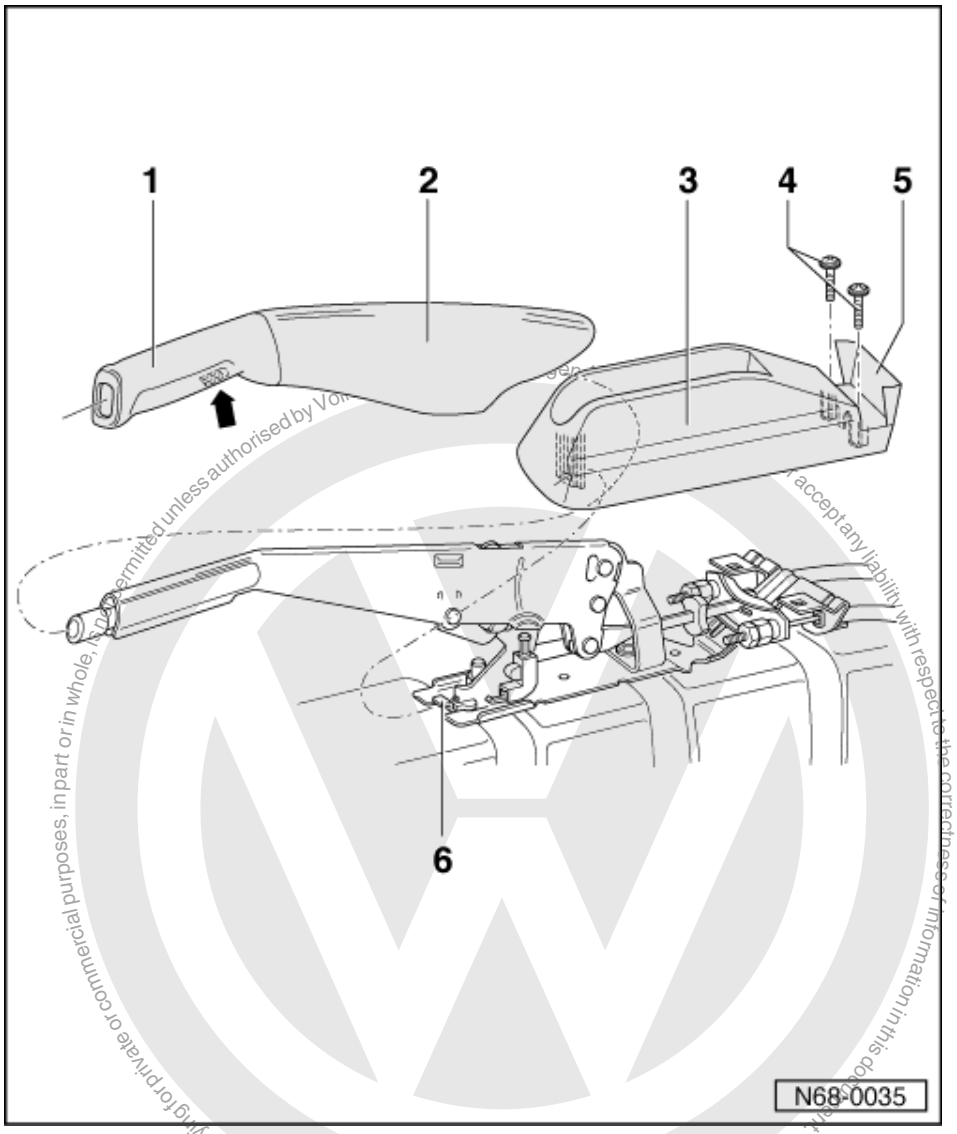

- Pull up handbrake lever.
- Lever locking lug -arrow- out with screwdriver.
- Pull trim -1- and -2- off handbrake lever.
- Lever up cover -5- on trim -3- and open out.
- Remove cross-head screws -4-.
- Unhook front of trim -3- from securing lug -6- and take upwards off handbrake lever.

satelettronica

2.5 - Removing handbrake lever hand grip (Polo Classic 10.99 >, Polo Estate > 10.99)

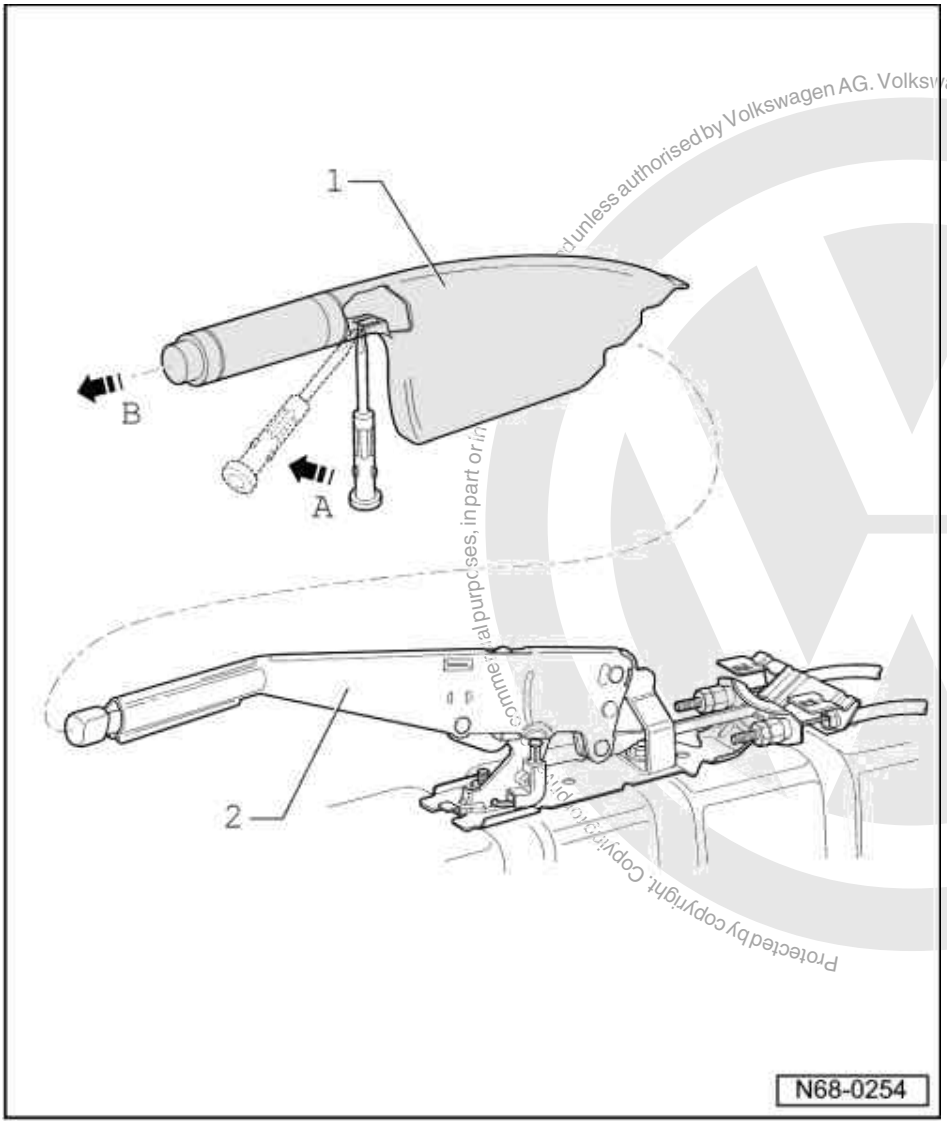

- Pull up handbrake lever.
- Place a small screwdriver in the recess in the handbrake lever and push in direction of hand grip -arrow A-.
- Pull hand grip -1- off handbrake lever -2-, -arrow B-.

Protected by copyright. Copyright by Volkswagen AG. Volkswagen AG does not guarantee or accept any liability with respect to the correctness of information in this document. Copyright by Volkswagen AG.
satelettronica

2.6 - Removing and installing driver's side compartment (Caddy, Polo Classic > 09.99, Polo Estate > 09.99)

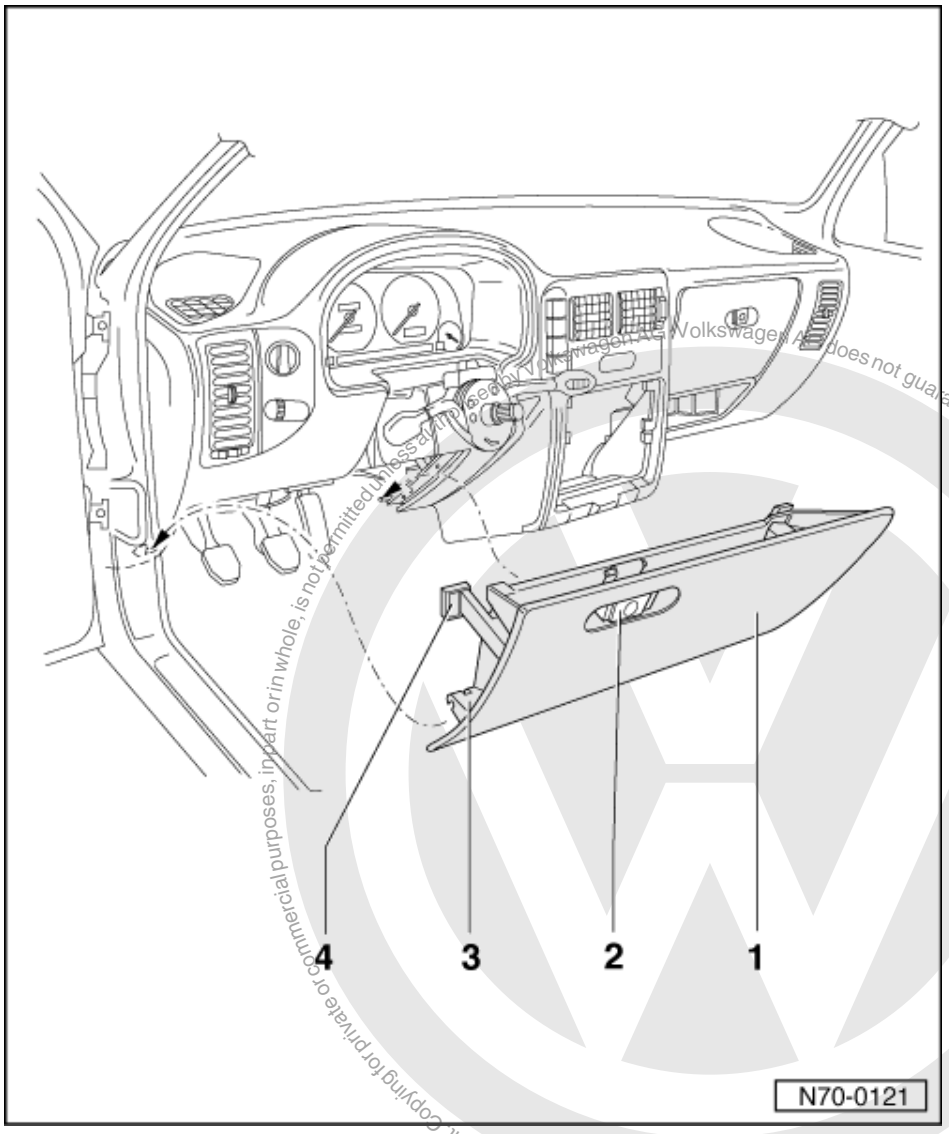

Protected by copyright. Copying for private or commercial purposes, in part or in whole, is not permitted unless authorised by Volkswagen AG. Volkswagen AG does not guarantee or accept any liability with respect to the correctness of information in this document. Copyright by Volkswagen AG.

satelettronica

Older vehicles

1 Stowage compartment

2 Latch

3 Hinge

4 Stop

- Removing:
- Open latch - 2 -.
- Push stowage compartment - 1 - upwards until the hinges - 3 - unhook.
- Pull compartment - 1 - off slightly in lower area and guide out of dash panel downwards together with stops - 4 -.

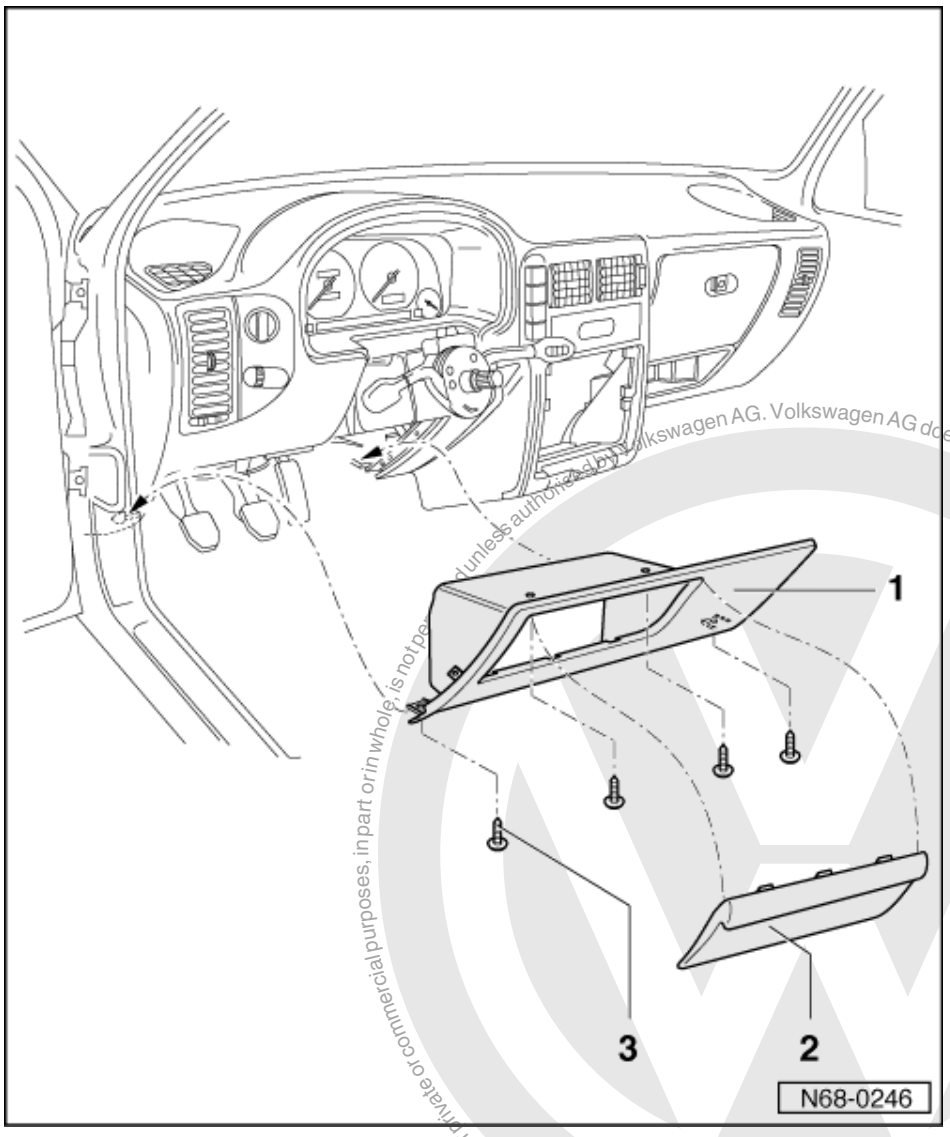

Protected by copyright. Copying for private or commercial purposes, in part or in whole, is not permitted unless authorised by Volkswagen AG. Volkswagen AG does not guarantee or accept any liability with respect to the correctness of information in this document. Copyright by Volkswagen AG.

satelettronica

Newer vehicles

1 Stowage compartment
2 Cover
3 Screw
- Qty. 4

Removing

- Unscrew screws - 3 - (Qty. 4) and remove stowage compartment.

2.7 - Removing driver's side compartment (Polo Classic 10.99 >, Polo Estate 10.99 >)

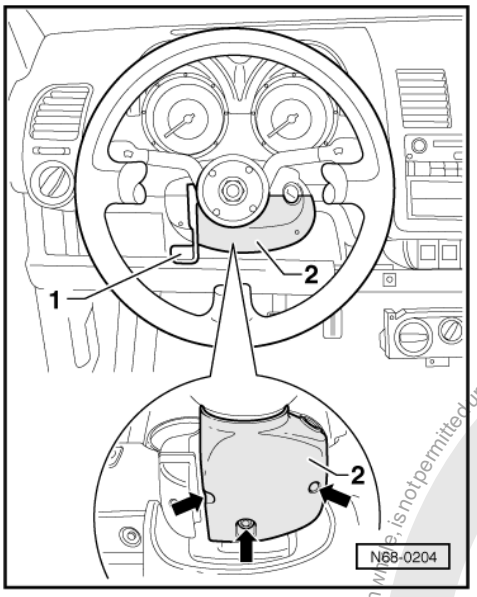

- -> Release height adjustment -1- for steering wheel.
- Move steering wheel to uppermost position.
- Remove screws -arrows-.
- Take off lower steering column switch trim -2-.

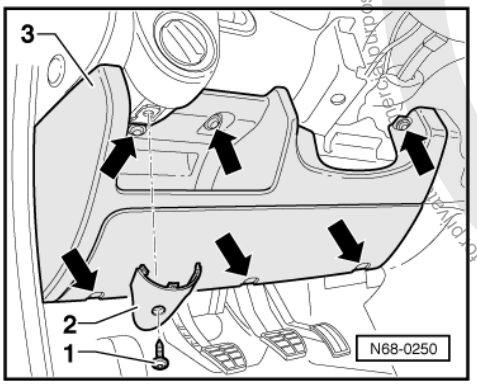

- -> Remove screw -1-.
- Take off cover -2-.
- Remove screws (Qty. 6) -arrows-.
- Remove driver's side stowage compartment -3-.

Protected by copyright. Copying for private or commercial purposes, in part or in whole, is not permitted unless authorised by Volkswagen AG. Volkswagen AG does not guarantee or accept any liability with respect to the correctness of information in this document. Copyright by Volkswagen AG.
satelettronica

2.8 - Removing driver's side footwell cover

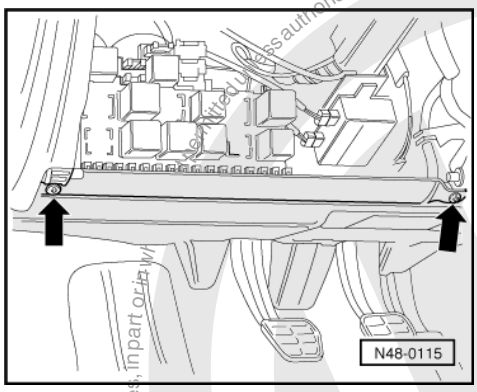

- -> Remove cross-head screws -arrows-.
- Take out driver's side footwell cover.

2.9 - Removing front passenger's compartment (Caddy, Polo Classic > 09.99, Polo Estate > 09.99)

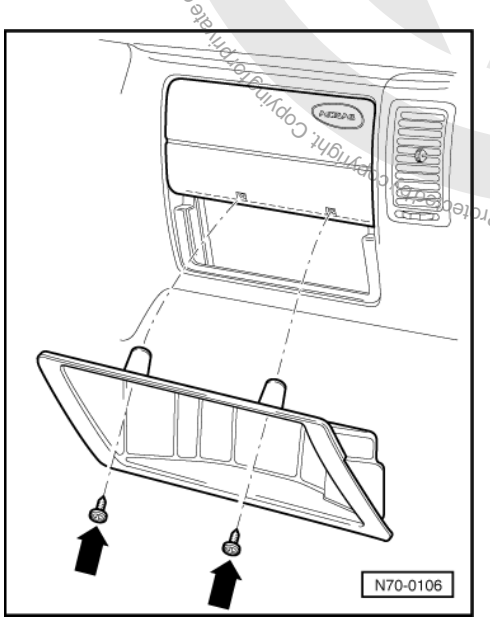

- -> Remove cross-head screws -arrows-.
- Pull passenger side shelf out of dash panel.

satelettronica

2.10 - Removing glove box (Caddy, Polo Classic > 09.99, Polo Estate > 09.99)

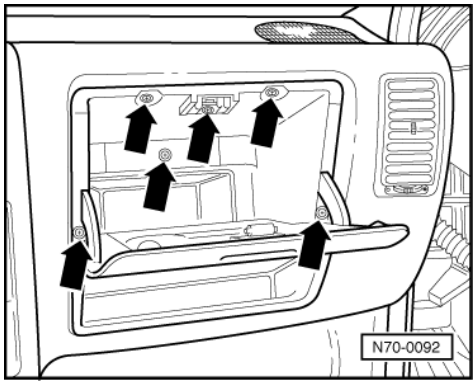

- Open glove box.
- -> Remove cross-head screws -arrows-.
- Pull glove box with shelf out of dash panel.

Removing glove box on vehicles with front passenger airbag

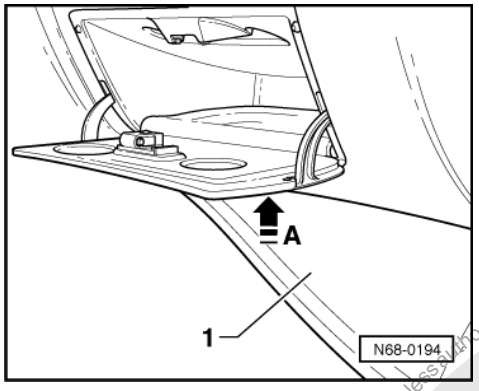

- Open glove box.
- -> Pull down trim under the dash panel -1-.
- Grasp behind dash panel -arrow A-.

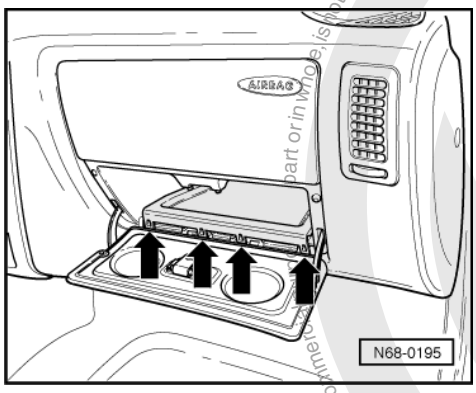

- -> Release tongues on the felt insert and release from the retainer -arrows-.
- Push the felt insert upwards and then pull out forwards.

satelettronica
Protected by copyright. Copying for private or commercial purposes, in part or in whole, is not permitted unless authorised by Volkswagen AG. Volkswagen AG does not guarantee or accept any liability with respect to the correctness of information in this document. Copyright by Volkswagen AG.

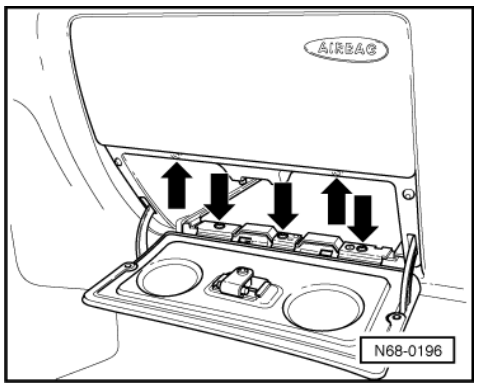

- -> Remove Torx screws -arrows-.
- Remove glove box.

2.11 - Removing glove box (Polo Classic 10.99 >, Polo Estate 10.99 >)

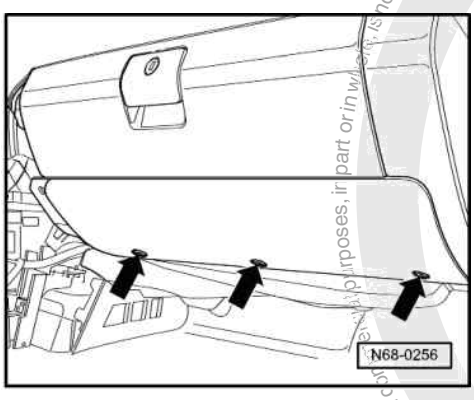

- Remove driver's side compartment => Page 17 .
- Remove centre console =>Page 9 .
- -> Remove three screws -arrows-.

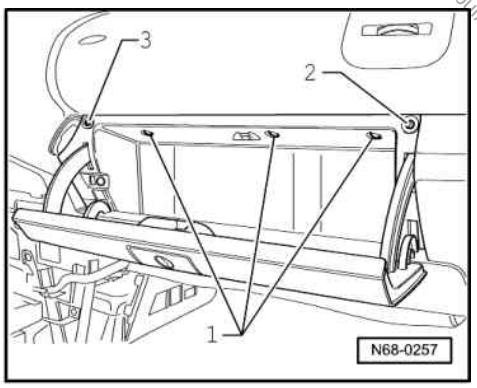

- Open glove box.
- -> Remove three screws -1-.
- Remove buffer stops -2- and -3-.

Protected by copyright. Copying for private or commercial purposes, in part or in whole, is not permitted unless authorised by Volkswagen AG. Volkswagen AG does not guarantee or accept any liability with respect to the correctness of information in this document. Copyright by Volkswagen AG.
satelettronica

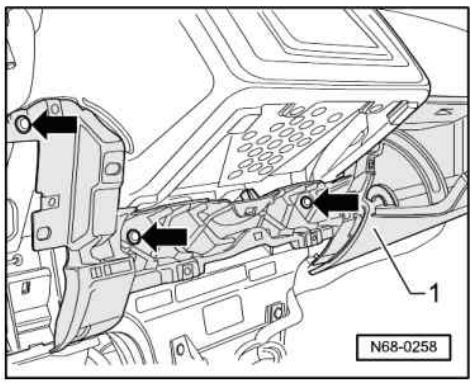

- -> Remove three screws -arrows-.
- Remove glove box.

2.12 - Removing dash panel insert trim (Caddy, Polo Classic > 09.99, Polo Estate > 09.99)

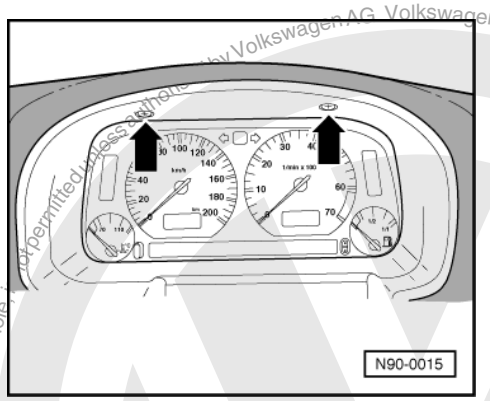

- -> Remove cross-head screws -arrows-.
- Pull trim for dash panel insert out.

2.13 - Removing dash panel insert trim (Polo Classic 10.99 >, Polo Estate 10.99 >)

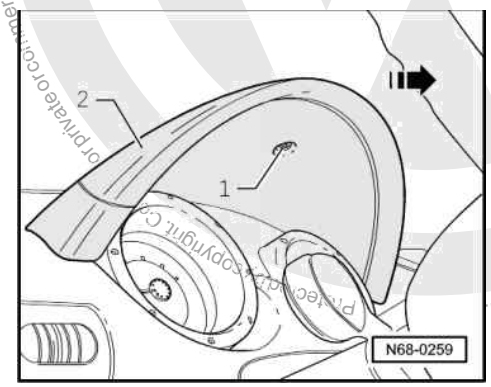

- -> Remove screw -1-.
- Unclip upper part of instrument hood -2- in direction of arrow.

Volkswagen AG does not guarantee or accept any liability with respect to the correctness of information in this document. Copyright by Volkswagen AG. Not permitted unless authorized by Volkswagen AG. Protected by copyright. Copy for private or commercial purposes, in part or in whole, is not permitted unless authorized by Volkswagen AG.
satelettronica

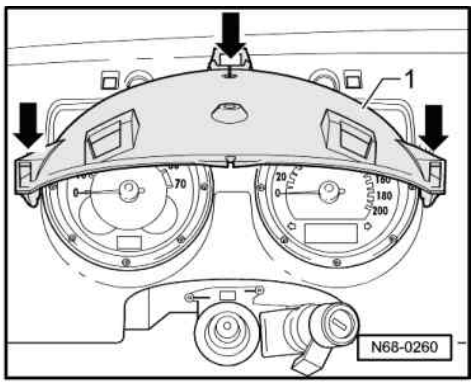

- -> Remove three screws -arrows-.
- Remove lower part of instrument hood -1-.

2.14 - Removing sun visor

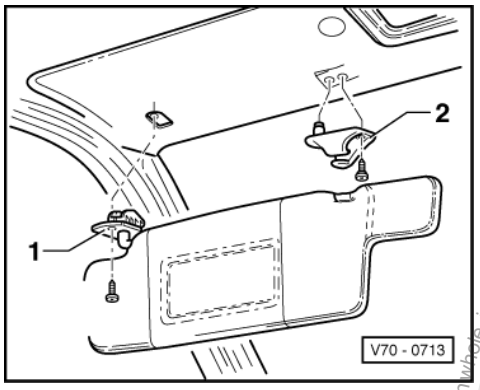

- -> Unscrew sun visor -1- and sun visor mounting -2- (turn sun visor mounting through 90° to remove) and separate connector for mirror lighting.

Protected by copyright. Copying for private or commercial purposes, in part or in whole, is not permitted unless authorised by Volkswagen AG. Volkswagen AG does not guarantee or accept any liability with respect to the correctness of information in this document. Copyright by Volkswagen AG.
satelettronica

2.15 - Removing and installing stowage compartment in front of roof headliner (Caddy)

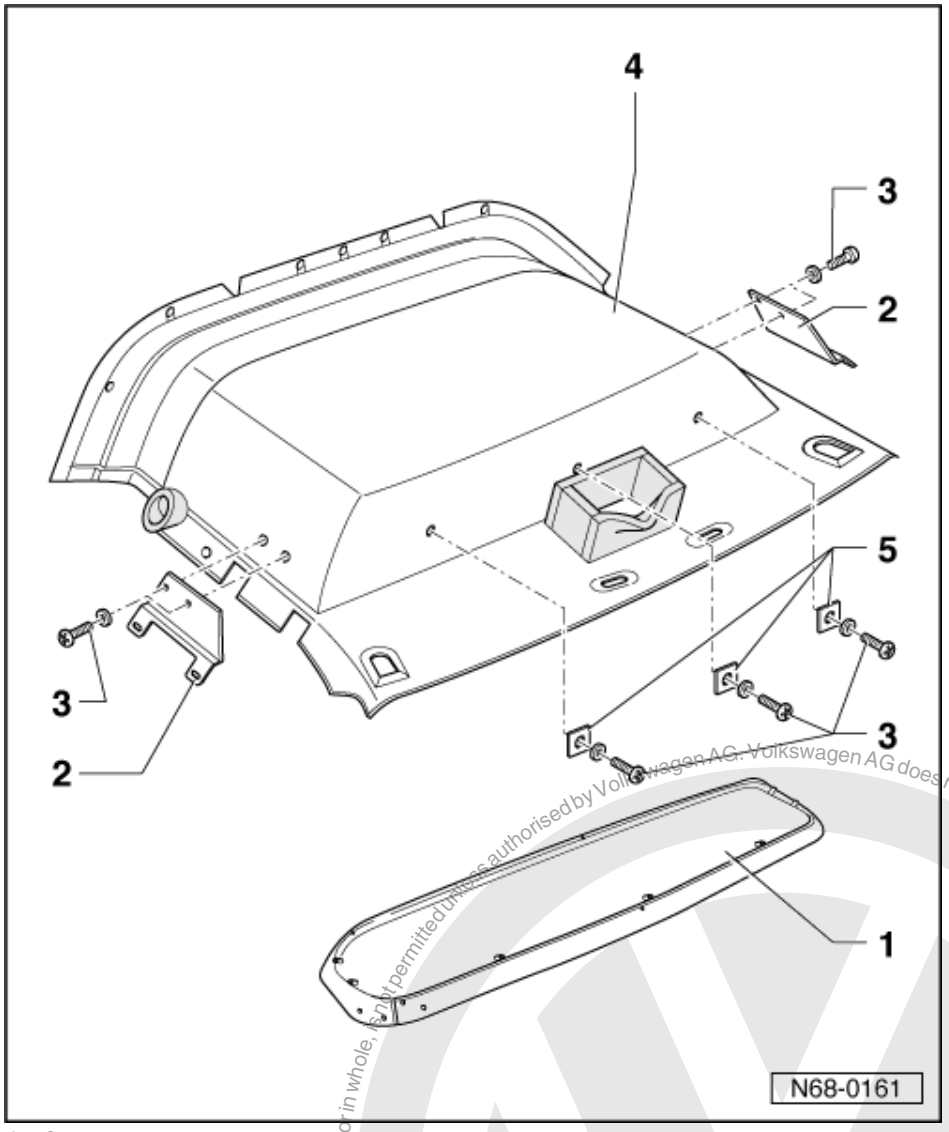

1 Stowage compartment
- Removing:
- Remove front headliner => Page 142 .
- Remove cross-head screws - 3 - and take off stowage compartment.

2 Reinforcing plate

3 Cross-head screw

4 Front moulded headliner

5 Backing piece

Protected by copyright. Copying for private or commercial purposes, in part or in whole, is not permitted unless authorised by Volkswagen AG. Volkswagen AG does not guarantee or accept any liability with respect to the correctness of information in this document. Copyright by Volkswagen AG.
satelettronica

3 - Grab handle

3.1 - Grab handle

3.2 - Removing hand hold (roof)

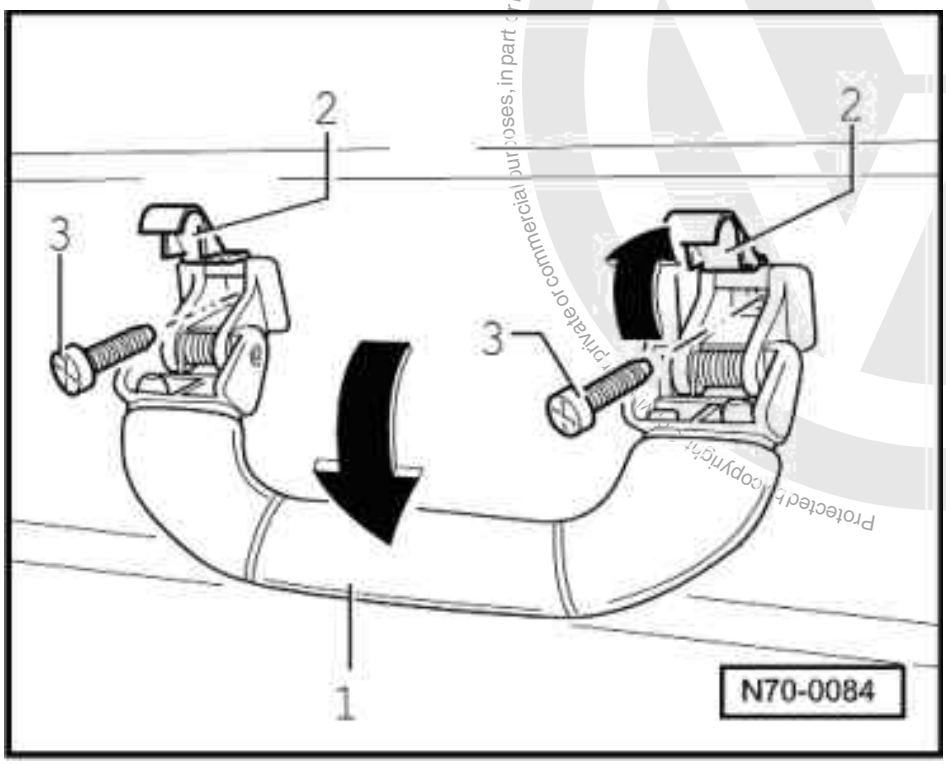

- -> Fold handle -1- down.
- Lever cover -2- up with screwdriver and fold open.
- Unscrew cross-head screws -3- and take off handle -1-.

Protected by copyright. Copyright by Volkswagen AG. Volkswagen AG does not guarantee or accept any liability with respect to the correctness of information in this document. Copyright by Volkswagen AG. Protected by copyright. Copyright by Volkswagen AG. Volkswagen AG does not guarantee or accept any liability with respect to the correctness of information in this document. Copyright by Volkswagen AG. Protected by copyright. Copyright by Volkswagen AG. Volkswagen AG does not guarantee or accept any liability with respect to the correctness of information in this document. Copyright by Volkswagen AG.
satelettronica

4 - Sill panel trims

4.1 - Sill panel trims

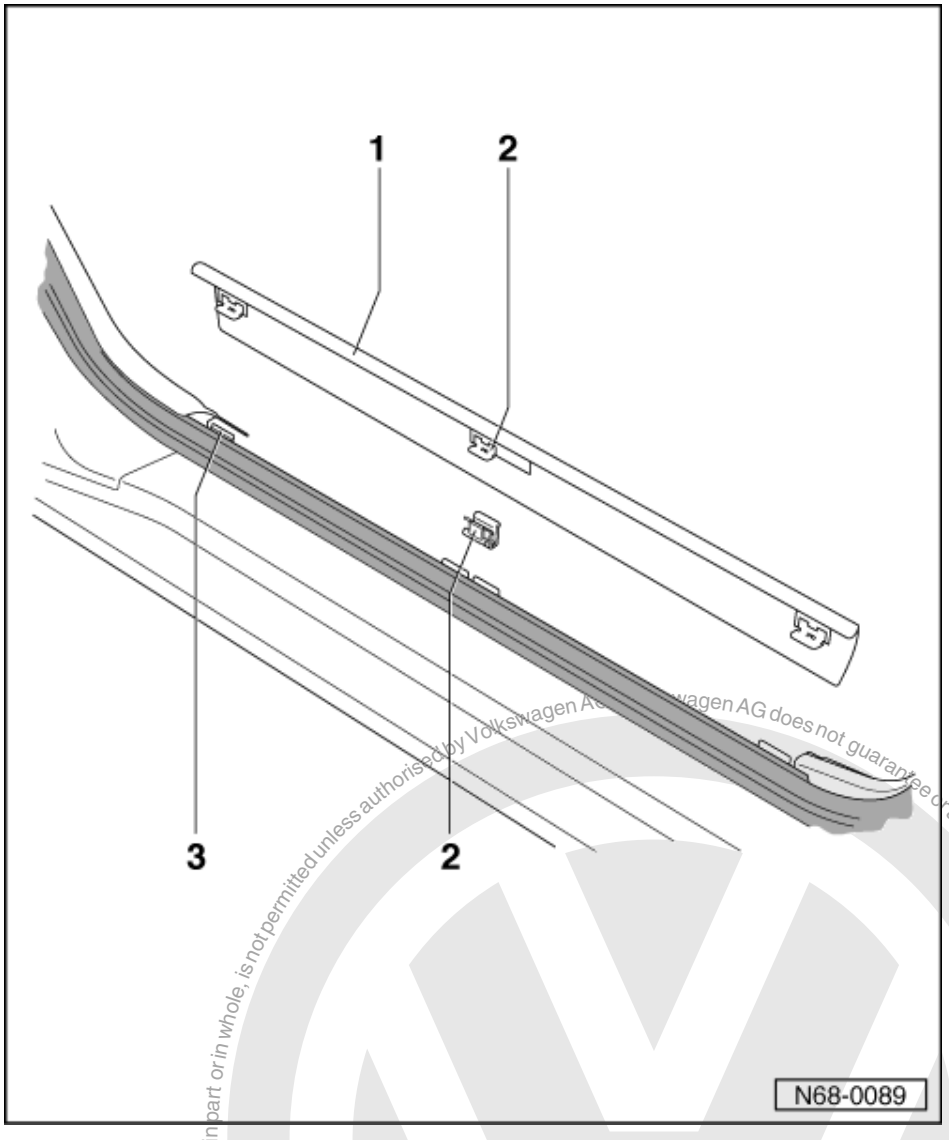

4.2 - Removing and installing inner sill panel trim

1 Sill panel trim
- ◆ Removing:
- Pull sill panel trim off upwards out of clips - 2 -.
- ◆ Installing:
- Ensure clips - 2 - are seated correctly on sill panel trim.
- Press sill panel trim and clips onto retainer -3-.

2 Clip

3 Retainer

Protected by copyright. Copying for private or commercial purposes, in part or in whole, is not permitted unless authorised by Volkswagen AG. Copyright by Volkswagen AG. Volkswagen AG does not guarantee or accept any liability with respect to the correctness of information in this document.
satelettronica

5 - Luggage compartment cover

5.1 - Luggage compartment cover

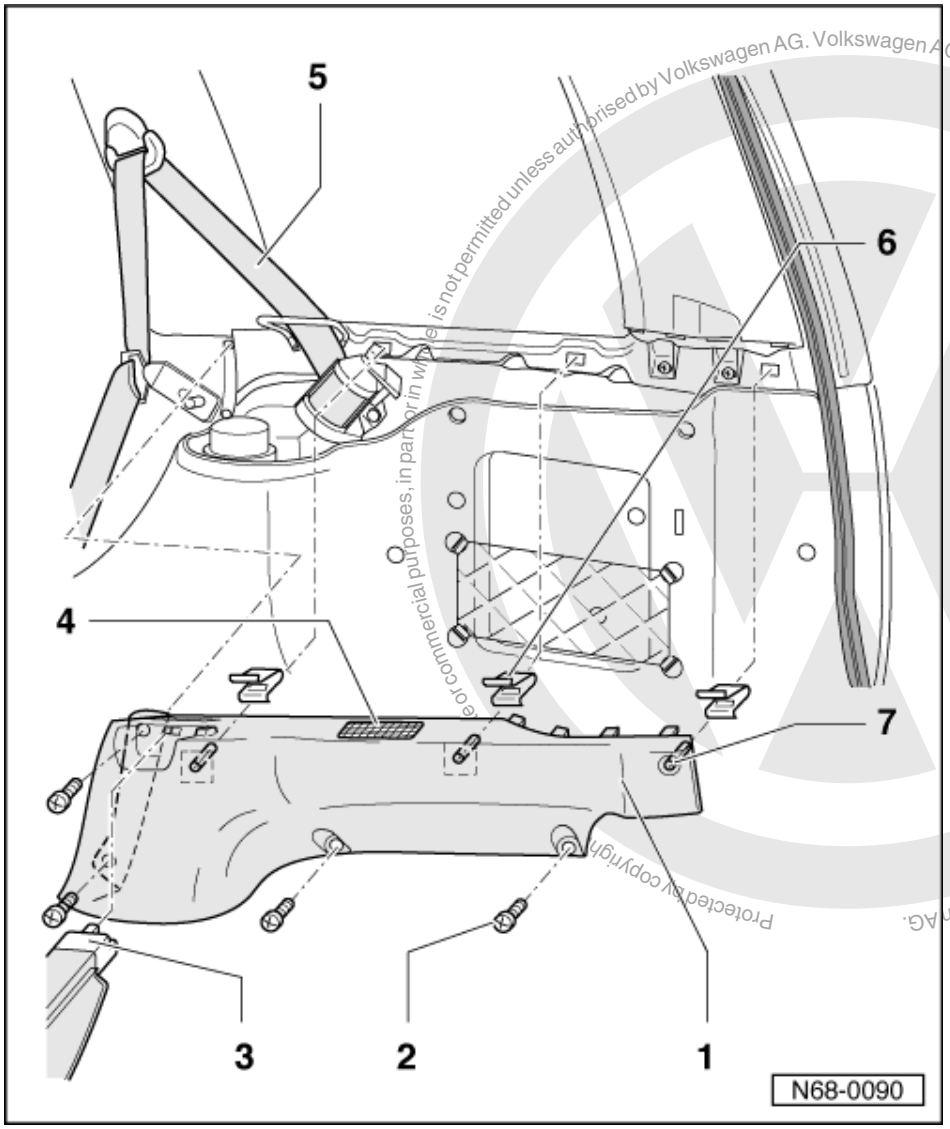

Protected by copyright. Copyright by Volkswagen AG. Volkswagen AG does not guarantee or accept any liability with respect to the correctness of information in this document. Copyright by Volkswagen AG. e or commercial purposes, in part or in whole is not permitted unless authorised by Volkswagen AG.
satelettronica

5.2 - Removing and installing load area cover (Polo Estate)

1 Load area cover support

- ◆ Removing:
- Remove load area support - 3 -.
- Release backrest and fold forwards.
- Remove cross-head screws - 2 -.
- Pull support with retaining pins - 7 - out from clips - 6 -.
- Guide seat belt - 5 - out.
- Disconnect electrical cables for loudspeakers if applicable.

2 Cross-head screw

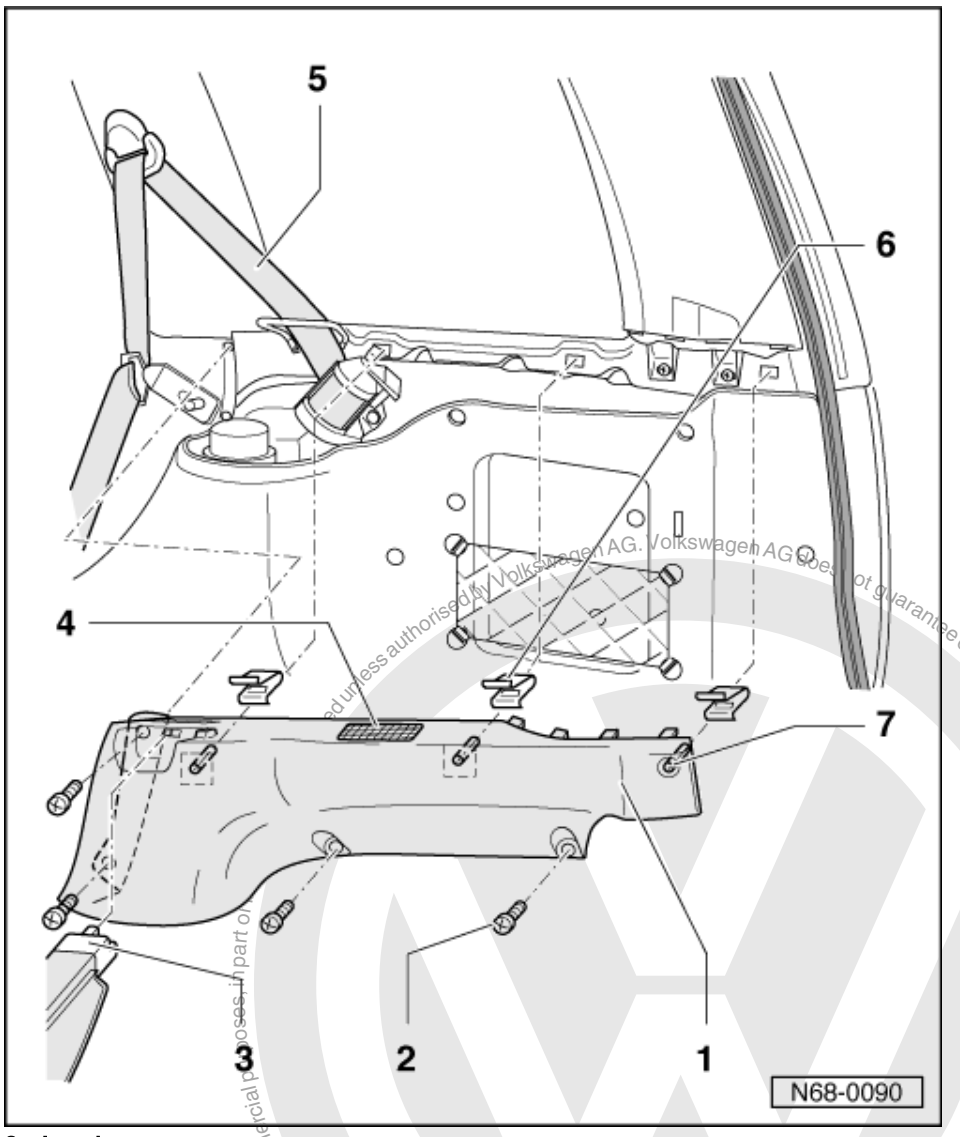

3 Load area cover

4 Speaker cover
- Joined permanently to load area support - 1 -

5 Rear seat belt
- Guided through a slot in load area cover support - 1 -

6 Clip

7 Retaining pin
- On reverse of load area cover support - 1 -

Protected by copyright. Copyright by Volkswagen AG.
Copyright by Volkswagen AG. Volkswagen AG does not guarantee or accept any liability with respect to the correctness of information in this document.
unless authorised by Volkswagen AG. Volkswagen AG does not guarantee or accept any liability with respect to the correctness of information in this document. Copyright by Volkswagen AG.
satelettronica

5.3 - Removing and installing load area floor (Polo Estate)

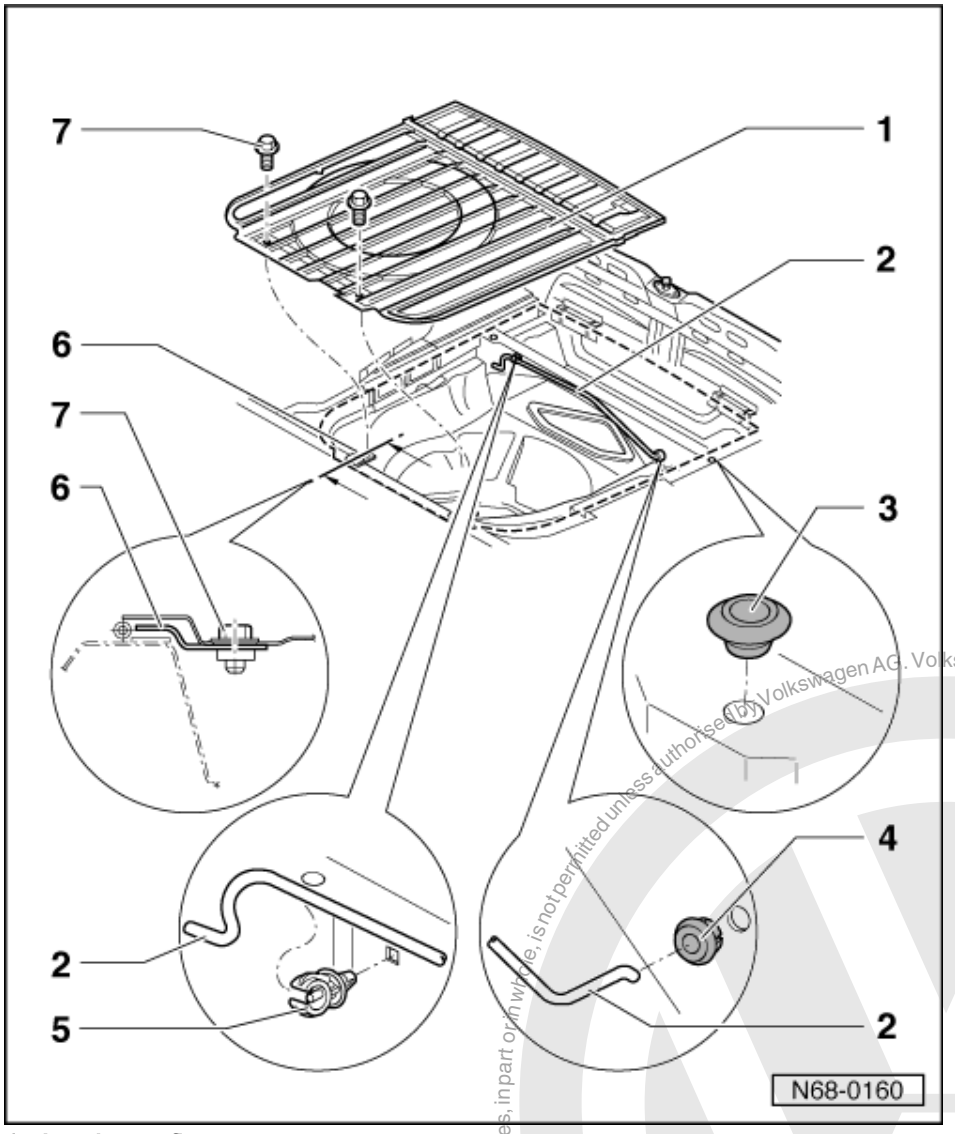

1 Load area floor
- With flap on end

2 Stay

3 Plug

4 Bonded rubber bush

5 Clip
- With spreader pin

6 Flap hinge

7 Combi-bolt
- 23 Nm

Protected by copyright. Copying for private or commercial purposes, in part or in whole, is not permitted unless authorised by Volkswagen AG. Volkswagen AG does not guarantee or accept any liability with respect to the correctness of information in this document. Copyright by Volkswagen AG.
satelettronica

69 - Passenger protection

Protected by copyright. Copyright by Volkswagen AG. Volkswagen AG does not guarantee or accept any liability with respect to the correctness of the contents of this document. Copying for private or commercial purposes, in part or in whole, is not permitted unless authorised by Volkswagen AG.

1 - Seat belts

1.1 - Seat belts

1.2 - Safety regulations for belt tensioners

- Testing, removing, installing and repair work may only be performed by qualified personnel.
- Belt tensioner components may be neither opened nor repaired; always use new parts (danger of accident).
- Belt tensioner units which have received hard knocks or been dropped on the floor, must not be fitted into a vehicle.
- Belt tensioner units which are mechanically damaged (dents, fractures) must be renewed.
- The storage and transportation complies with the legislation for explosive substances.
- The disposal of old components that have not been ignited (triggered) is carried out by the distribution centre or the importer.
- Belt tensioners that have ignited can be disposed of as normal scrap.
- The belt tensioner unit should be installed immediately after removing them from their packaging.
- No tools with hammer type action may be used to dismantle the belt tensioner.
- If the work is interrupted, the belt tensioner unit should again be placed in its packaging.
- It is not permitted to leave the belt tensioner unit unattended.
- The belt tensioner unit must not be treated with grease, cleaning or similar substances, nor may it be exposed to temperatures above 100° C, even for short periods.
- The pyrotechnic propellant has no expiry date, i.e. it has unlimited, maintenance-free life.

1.3 - Checking belt tensioner

- Pulling belt tensioner.

When the pre-tensioner has been triggered, the belt cannot be pulled out or roll back. The complete seat belt must be renewed.

satelettronica

1.4 - Removing and installing front seat belts with belt tensioning system (Caddy, Polo Classic > 09.99, Polo Estate > 09.99)

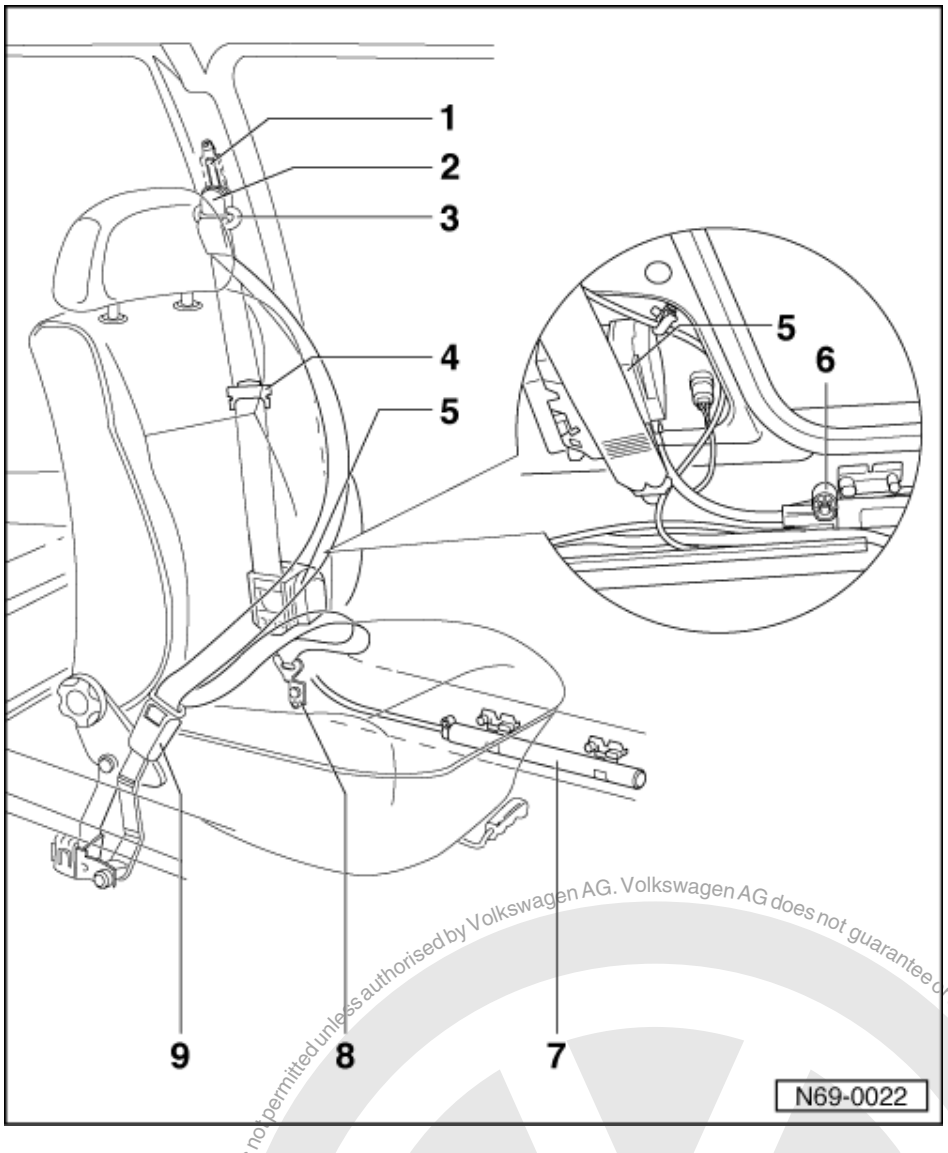

Warning!
Before commencing separating, straightening and panel beating work the belt tensioning units must be removed.

1 **Belt height adjustment fitting**
- Removing belt height adjustment fitting=> Page 36

2 **Threaded pin**
- Pushed on

3 **Belt relay**

4 **Belt guide**
- Secured with 2 cross-head screws
- 1.5 Nm

Protected by copyright. Copying for private or commercial purposes, in part or in whole, is not permitted unless authorised by Volkswagen AG. Volkswagen AG does not guarantee or accept any liability with respect to the correctness of information in this document. Copyright by Volkswagen AG.
satelettronica

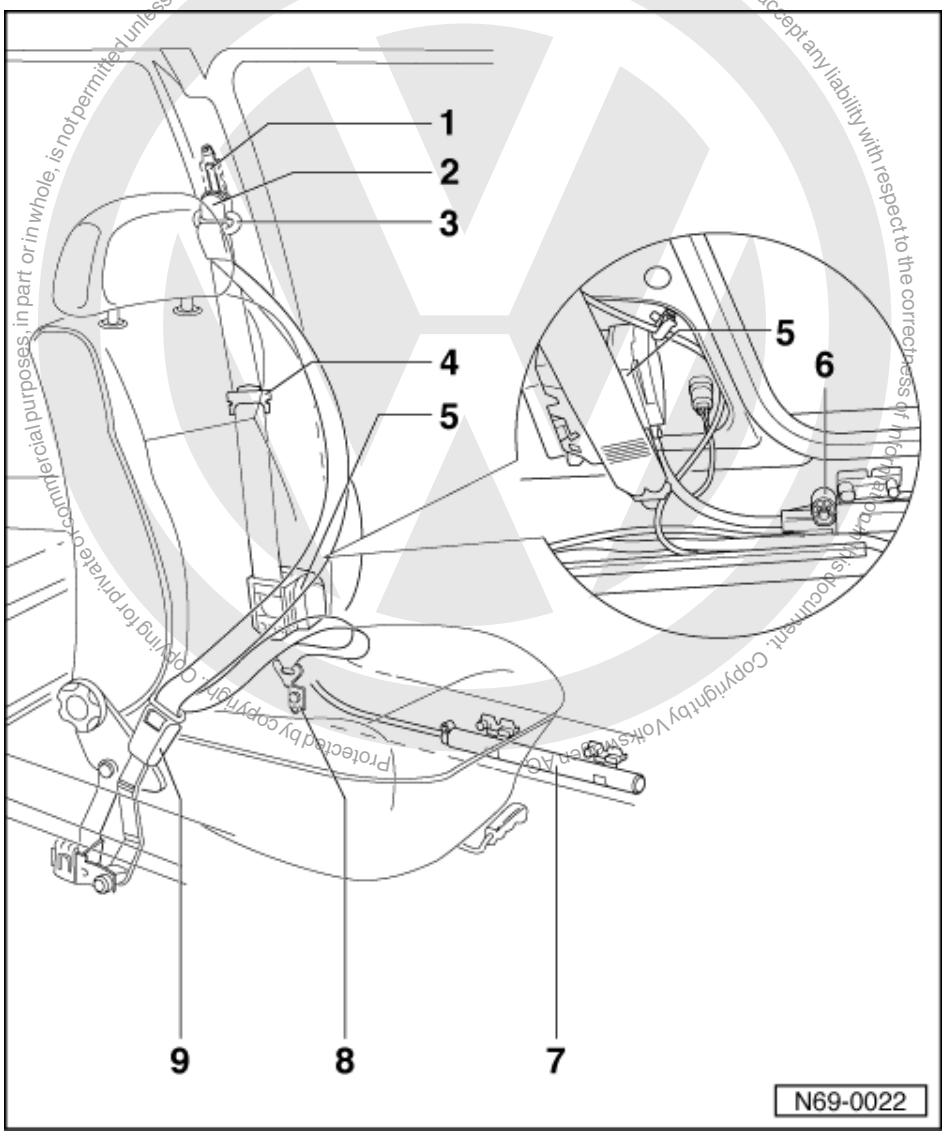

5 Inertia reel
- Removing => Page 32
- Retaining lugs determine position of belt reel

6 Locking nut
- 20 Nm
- Is an integral part of the tensioning unit

7 Tensioning unit
- Removing => Page 32
- Is an integral part of the seat belt
- Loosening the locking nut - 6 - makes the belt tensioner safe, tightening will make it operational again

8 Front anchor
- Removing => Page 38

9 Front belt latch
- Removing => Page 38

satelettronica

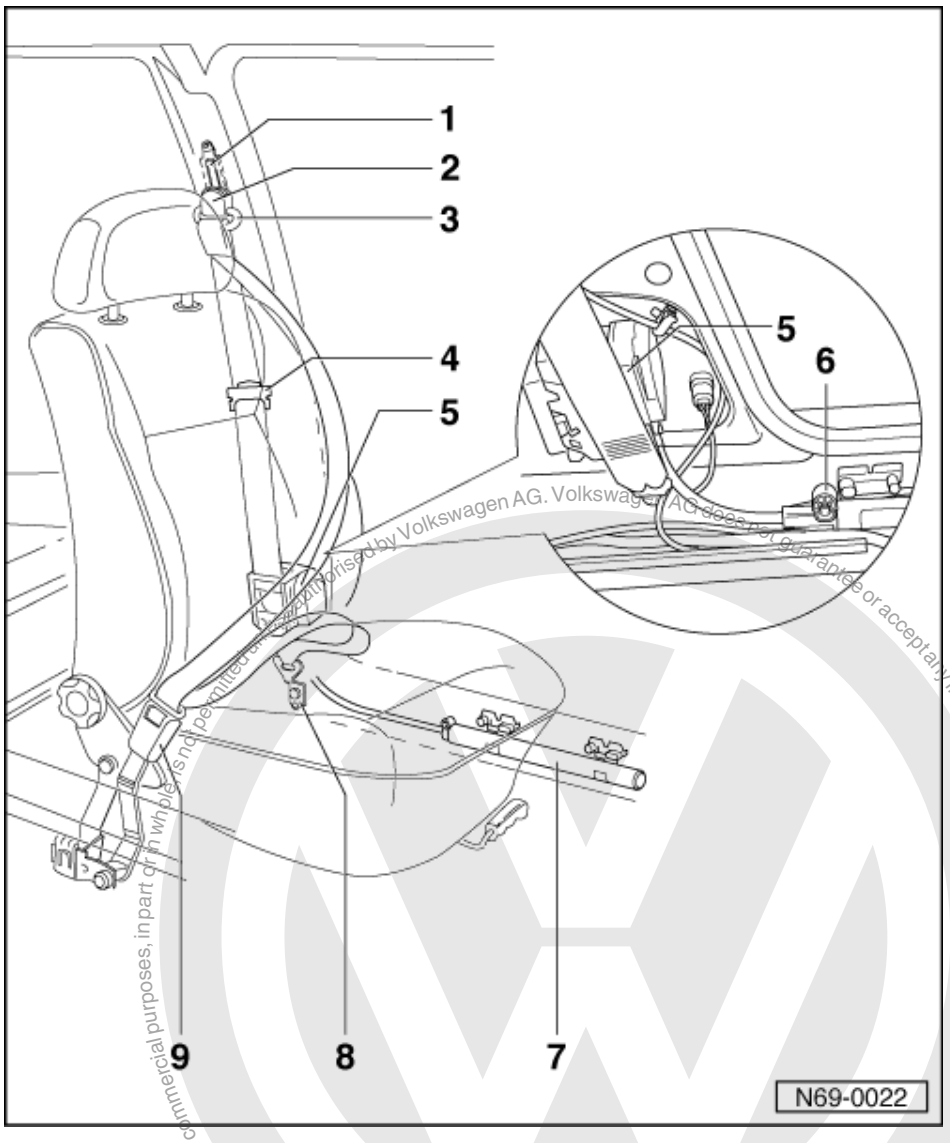

Copyright by Volkswagen AG. Volkswagen AG does not guarantee or accept any liability with respect to the correctness of information in this document. Copyright by Volkswagen AG. Reproduced by courtesy of Volkswagen AG. Not for private or commercial purposes, in part or in whole is not permitted unless authorised by Volkswagen AG.

satelettronica

Removing

- Remove sill panel trim => Page 25 .
- Remove side trim or B pillar lower trim => Page 116 .
- Remove locking nut - 6 -, this detaches the tensioning unit - 7 - and makes it safe.
- Remove belt guide - 4 -, belt relay - 3 - and front anchor - 8 -.
- Remove inertia reel - 5 -.
- Pull tensioning unit - 7 - out of retainers.

Warning!
Installation is carried out in the reverse order and must be adhered to.

1.5 - Removing and installing front seat belts with belt tensioning system (Polo Classic 10.99 >, Polo Estate 10.99 >)

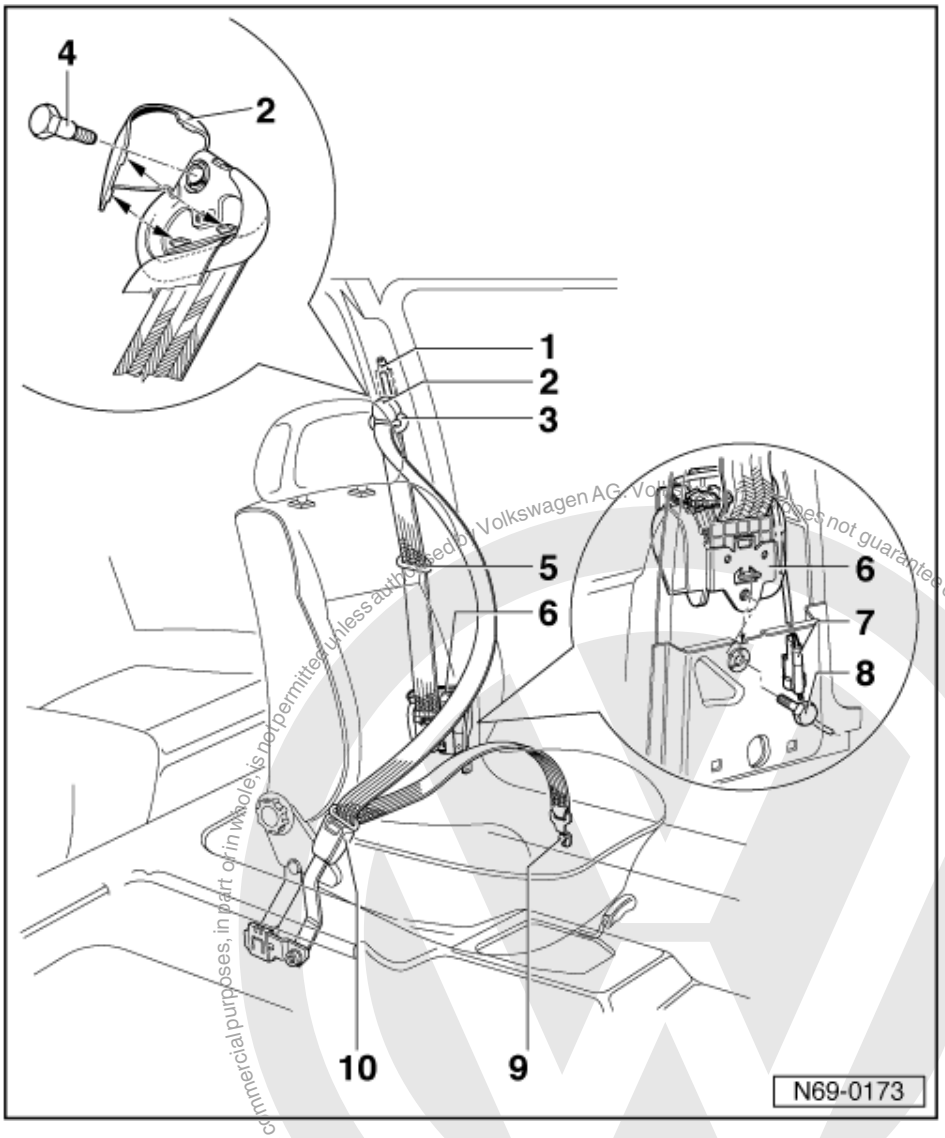

Warning!
Before commencing separating, straightening and panel beating work the belt tensioning units must be removed.

1 Belt height adjustment fitting
- Removing belt height adjustment fitting=> Page 37

2 Cover cap
3 Belt relay
4 Threaded pin
- 40 Nm

satelettronica

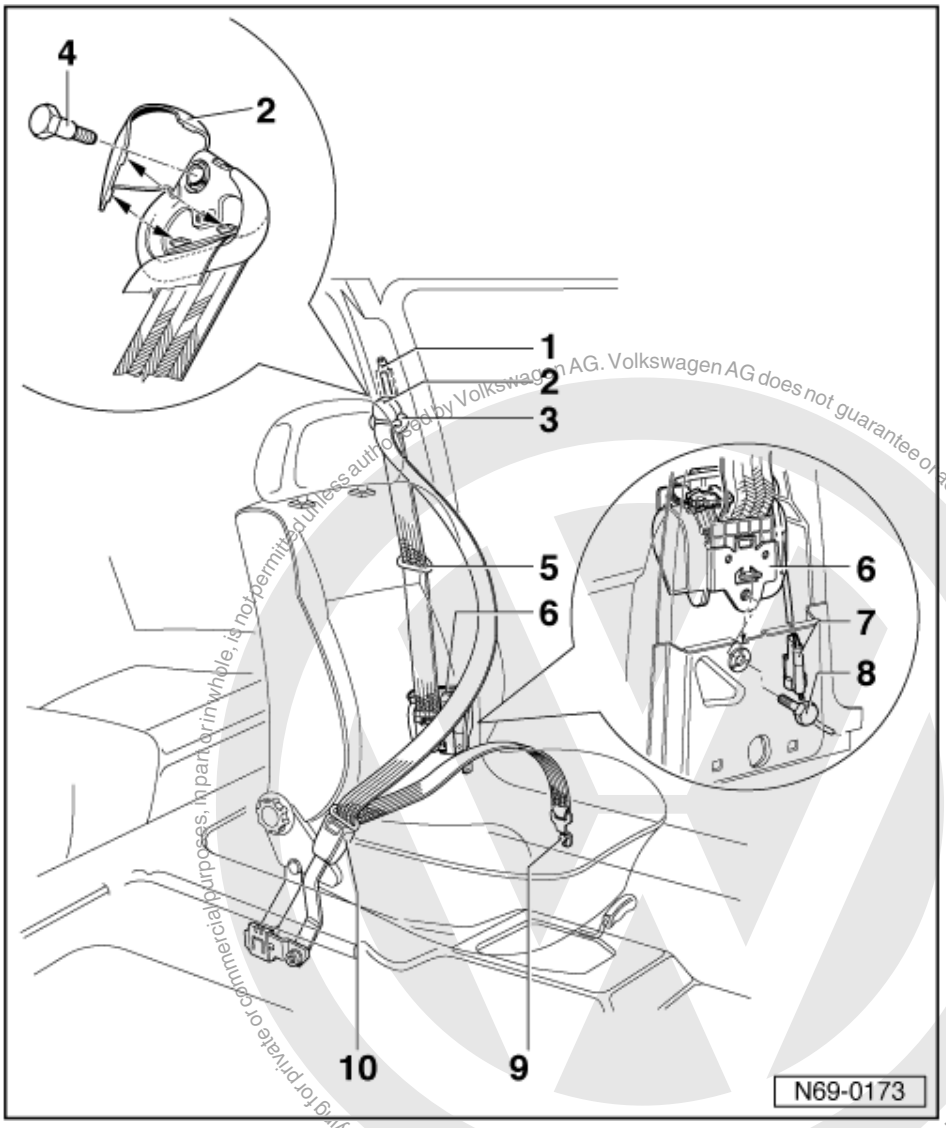

5 Belt guide
- Secured with 2 cross-head screws
- 1.5 Nm

6 Belt reel
- Two different belt tensioners are installed:
  electric belt tensioner for vehicles with side airbag
  mechanical belt tensioner for vehicles without side airbag
- To remove inertia belt reel, first remove trim at top and bottom of B-pillar => Page 114 .
- Retaining lugs determine position of belt reel

7 Connector
- For electric belt tensioner only

Protected by copyright. Copying for private or commercial purposes, in part or in whole, is not permitted unless authorised by Volkswagen AG. Volkswagen AG does not guarantee or accept any liability with respect to the correctness of information in this document. Copyright by Volkswagen AG.
satelettronica

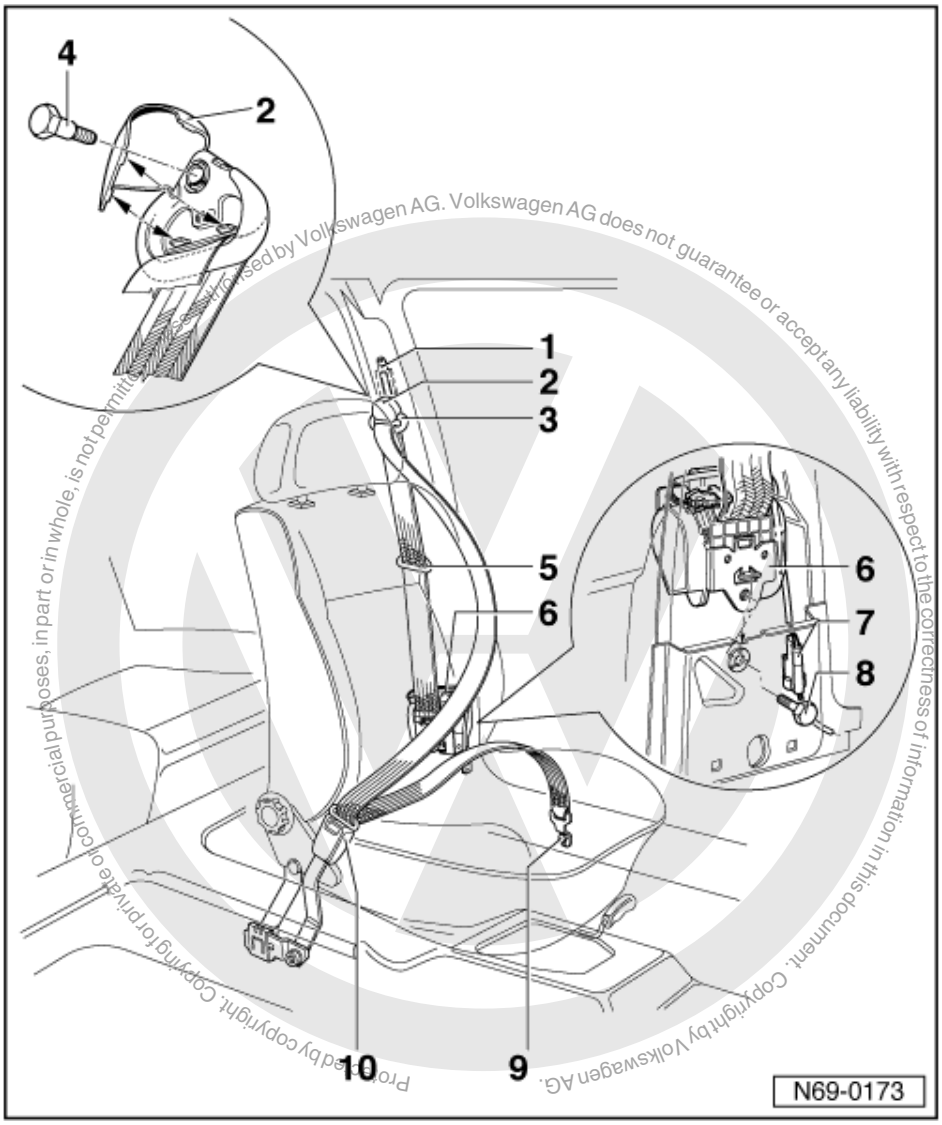

8 Hexagon head bolt
- Loosening the hexagon head bolt makes the belt tensioner safe, tightening will make it operational again
- 40 Nm

9 Front anchor
- Removing => Page 38

10 Front belt latch
- Removing => Page 38

satelettronica

1.6 - Removing and installing belt height adjustment fittings (Caddy, Polo Classic > 09.99, Polo Estate > 09.99)

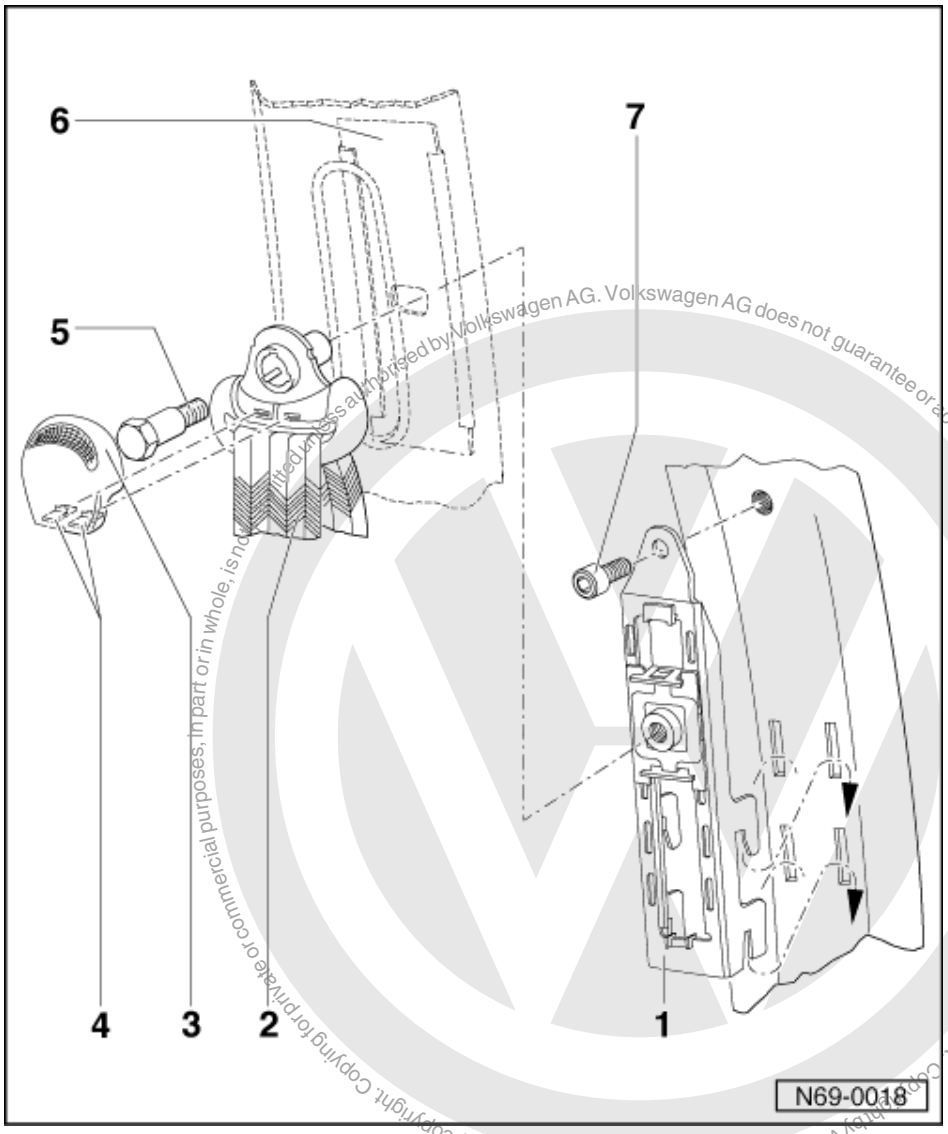

Protected by copyright. Copying for private or commercial purposes, in part or in whole, is not permitted unless authorised by Volkswagen AG. Volkswagen AG does not guarantee or accept any liability with respect to the correctness of information in this document. Copyright by Volkswagen AG.

1 Seat belt height adjuster
- To remove the belt height adjustment fitting, upper B-pillar trim must be removed first.

2 Seat belt relay

3 Cover
- Removing: Release locking lugs - 4 - and pull off cover.

4 Locking lugs

5 Hexagon bolt
- 40 Nm

6 Slide

7 Socket head screw
- 23 Nm

satelettronica

1.7 - Removing and installing belt height adjustment fittings (Polo Classic 10.99 >, Polo Estate 10.99 >)

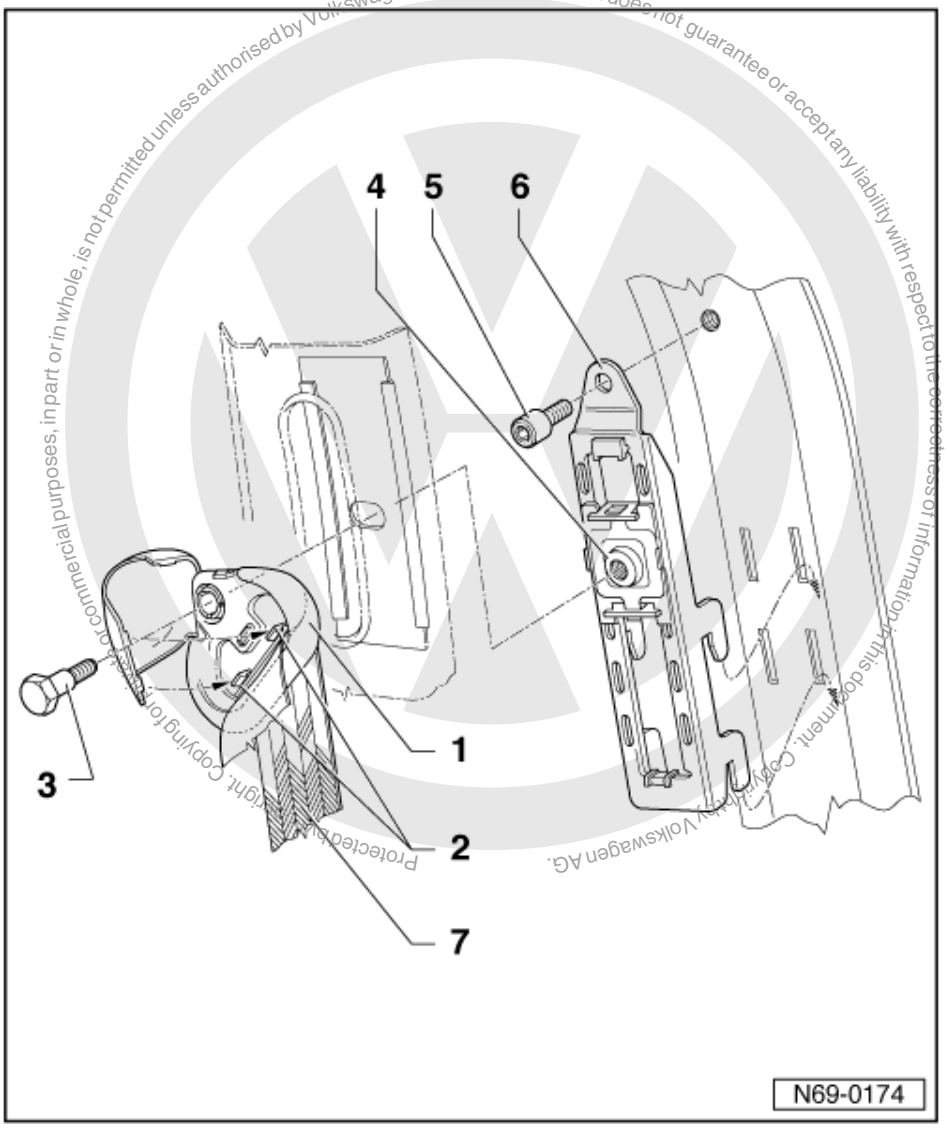

1 Seat belt height adjustment control
- Removing: Release locking lugs - 4 - and pull off cover.

2 Locking lugs

3 Threaded pin
- 40 Nm

4 Slide

5 Socket head screw
- 23 Nm

6 Belt height adjustment fitting
- To remove the belt height adjustment fitting, upper B-pillar trim must be removed first.

7 Seat belt relay

satelettronica

Protected by copyright. Copyright by Volkswagen AG. Volkswagen AG does not guarantee or accept any liability with respect to the correctness of information in this document. Copying for private or commercial purposes, in part or in whole, is not permitted unless authorised by Volkswagen AG.

1.8 - Removing front fittings

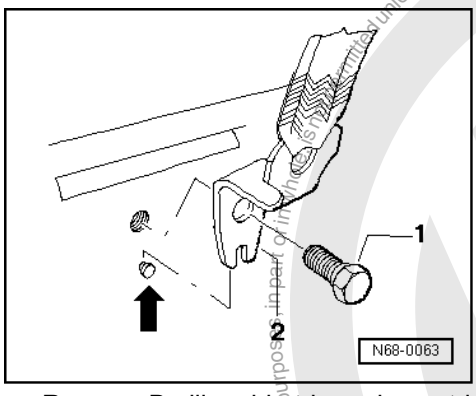

- Remove B pillar side trim or lower trim => Page 116 .

1 - -> Hexagon head bolt 40 Nm
2 - Seat belt (when installing, note locating pin -arrow-).

1.9 - Removing front belt latch

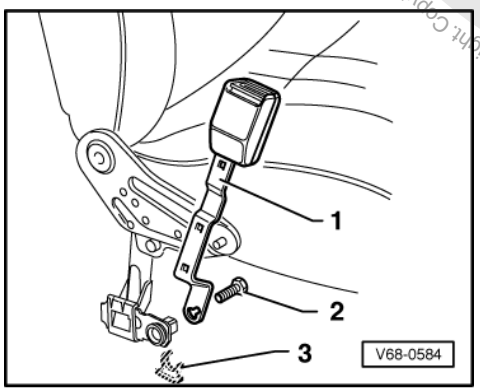

1 - -> Front belt latch
1 - Hexagon head bolt 40 Nm
3 - Clip (slide piece)

satelettronica

1.10 - Removing and installing rear seat belts

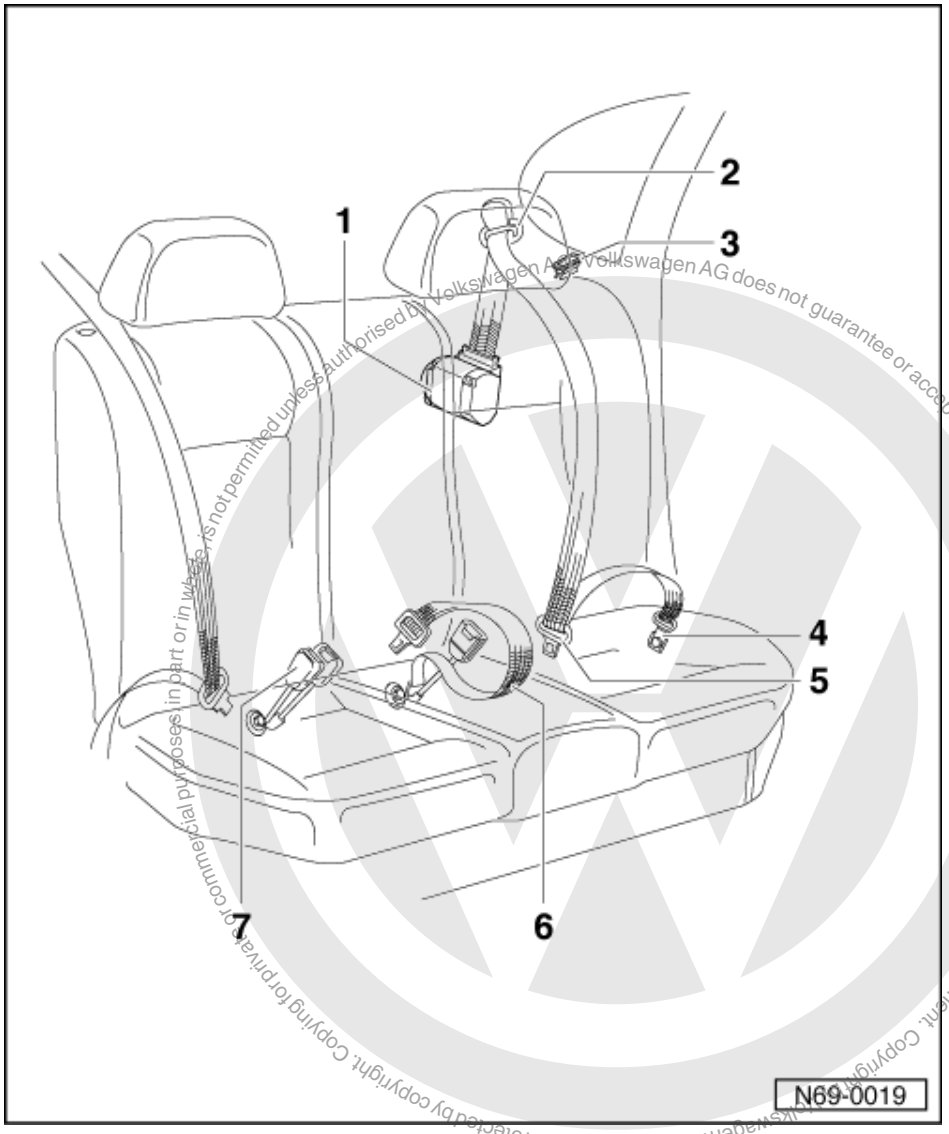

Protected by copyright. Copyright for private or commercial purposes in part or in whole is not permitted unless authorised by Volkswagen AG. Volkswagen AG does not guarantee or accept any liability with respect to the correctness of information in this document. Copyright by Volkswagen AG.

Note:

Illustration shows a Polo Classic.

1 Belt inertia reel
- Removing Caddy => Page 41
- Removing Polo Classic => Page 43
- Removing Polo Estate => Page 45

2 Belt relay
- Removing Caddy => Page 41
- Removing Polo Classic => Page 43
- Removing Polo Estate => Page 45

satelettronica

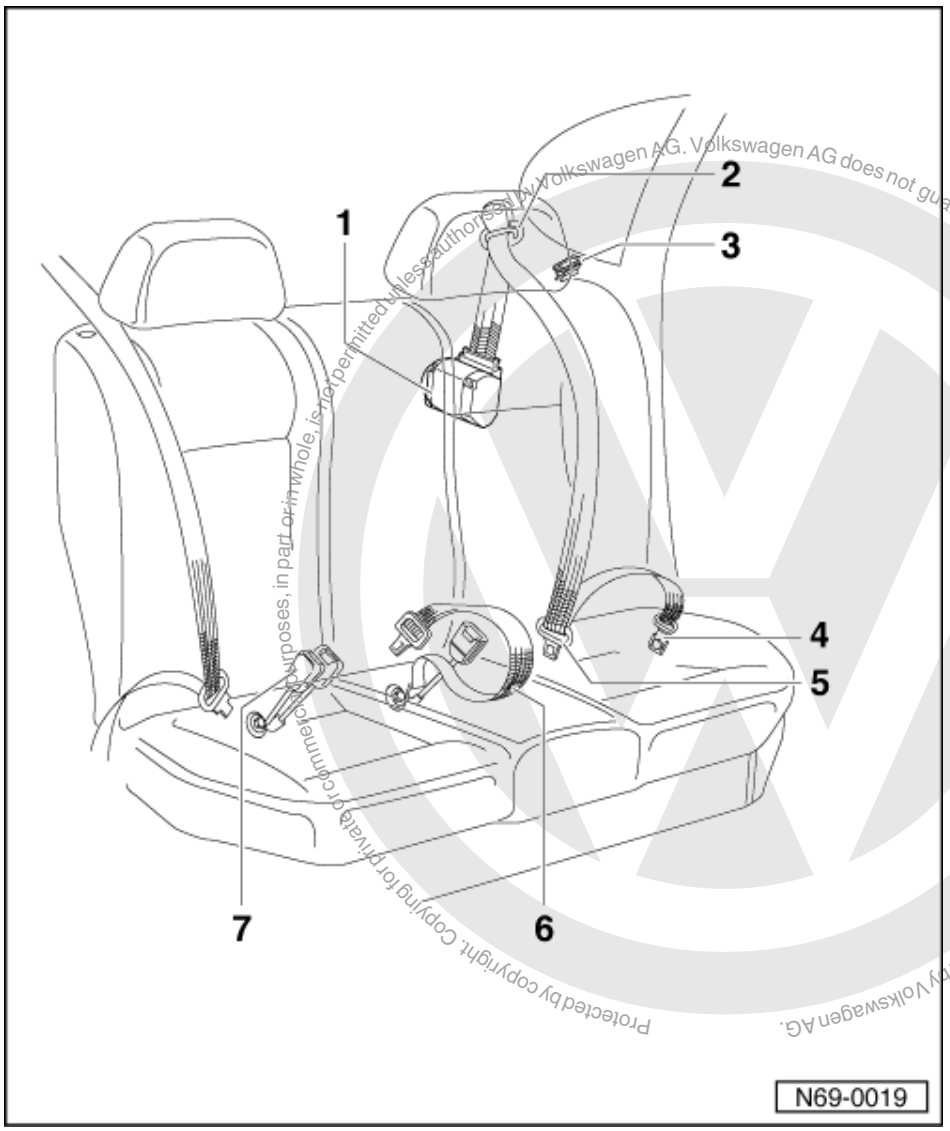

Protected by copyright. Copying for private or commercial purposes, in part or in whole, is not permitted unless authorised by Volkswagen AG. Volkswagen AG does not guarantee or accept any liability with respect to the correctness of information in this document. Copyright by Volkswagen AG.

satelettronica

3 Mounting
- In C and D pillar trim for Polo Classic
- In C pillar lower trim for Polo Estate

4 Rear anchor
- Removing Caddy => Page 41
- Removing Polo Classic => Page 43
- Removing Polo Estate => Page 45

5 Lock tongue

6 Lap belt
- Removing => Page 47

7 Double latch
- Removing => Page 47

1.11 - Removing and installing rear inertia reel (Caddy)

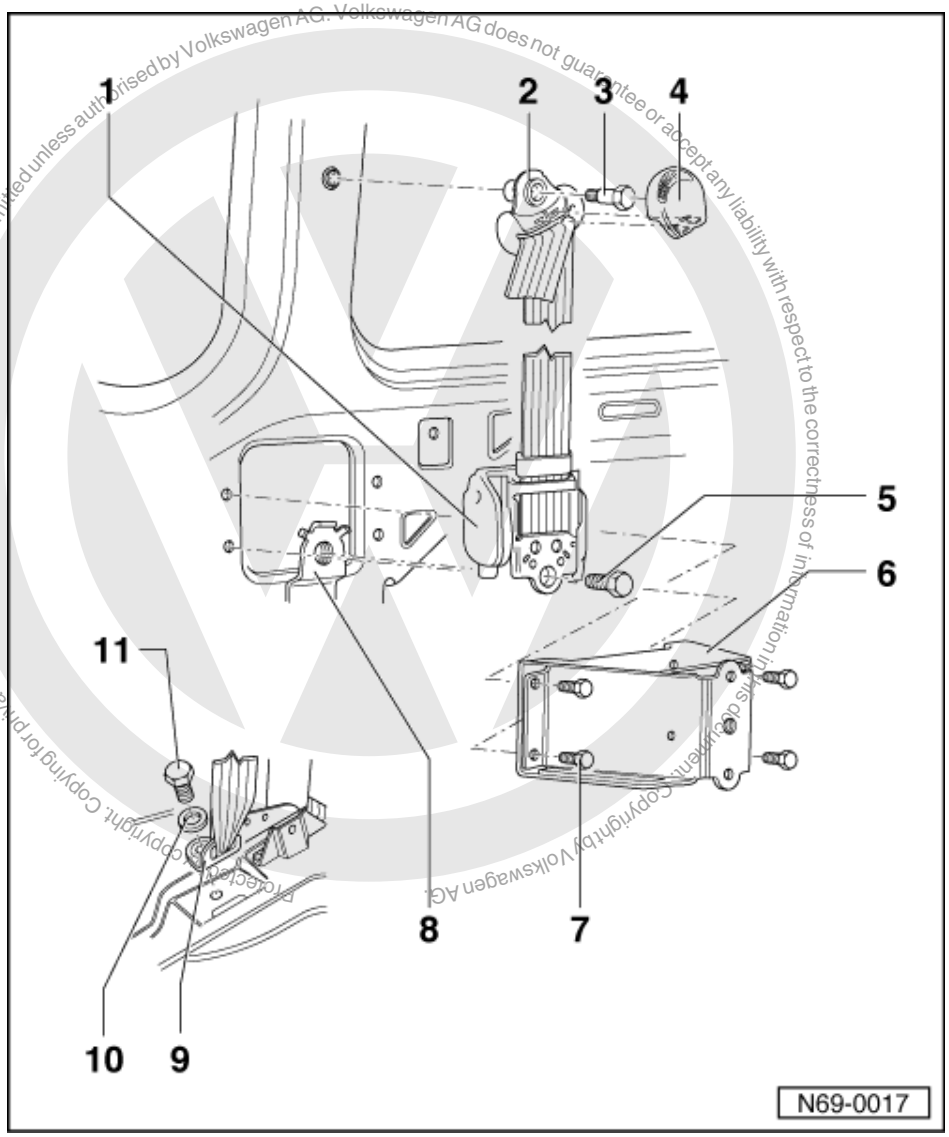

Volkswagen AG. Volkswagen AG does not guarantee or accept any liability with respect to the correctness of information in this document. Copyright by Volkswagen AG. Protected by copyright. Copying for private or commercial purposes, in part or in whole, is not permitted unless authorised by Volkswagen AG.

1 Belt inertia reel
- Retaining lugs determine position of belt reel

2 Belt relay

3 Hexagon bolt
- 40 Nm

4 Cover
- Removing: Release locking lugs and pull cover off.

5 Hexagon head bolt
- 40 Nm

6 Armrest bracket

7 Hexagon head bolt

satelettronica

Protected by copyright. Copying for private or commercial purposes, in part or in whole, is not permitted unless authorised by Volkswagen AG. Volkswagen AG does not guarantee or accept any liability with respect to the correctness of information in this document. Copyright by Volkswagen AG.

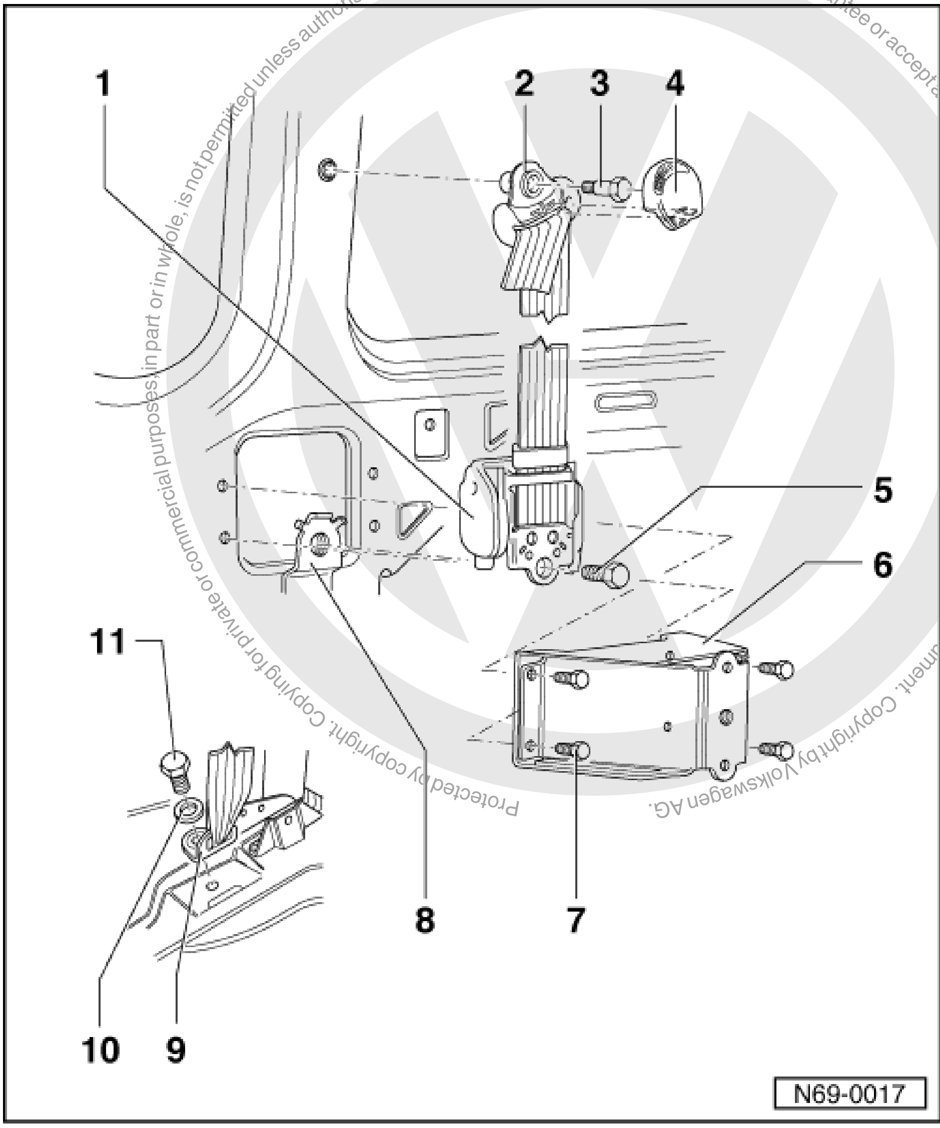

8 Mounting point of inertia reel
- Retaining lugs determine position of belt reel

9 Rear anchor

10 Washer

11 Hexagon head bolt
- 40 Nm

satelettronica

1.12 - Removing and installing rear inertia reel (Polo Classic)

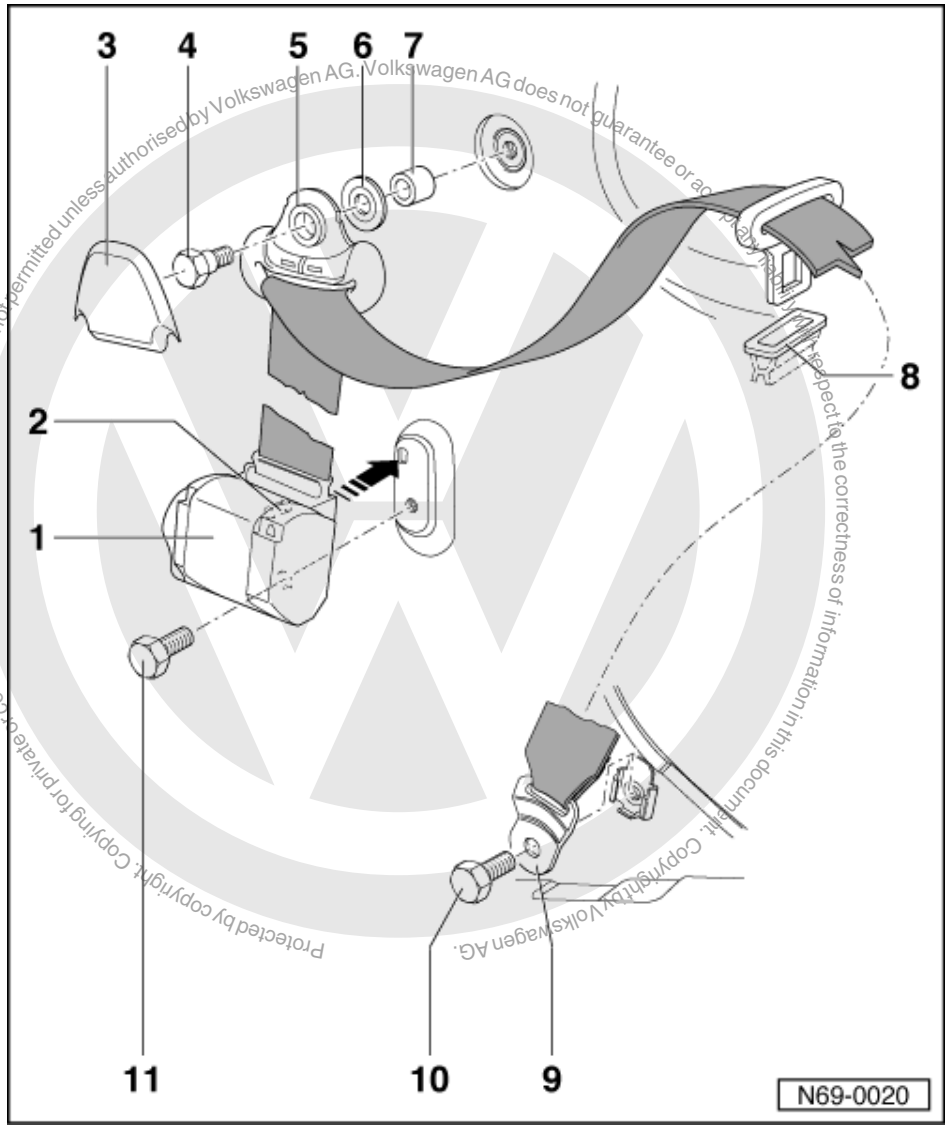

Protected by copyright. Copying for private or commercial purposes, in part or in whole, is not permitted unless authorised by Volkswagen AG. Volkswagen AG does not guarantee or accept any liability with respect to the correctness of information in this document. Copyright by Volkswagen AG.

1 Belt inertia reel
- ◆ Removing:
- - Remove rear shelf => Page 138 .
- - Remove C pillar lower trim => Page 119 .
- ◆ Locating lug - 2 - positions inertia reel -arrow-

2 Locating lug

3 Cover

4 Hexagon bolt
- ◆ 40 Nm

satelettronica

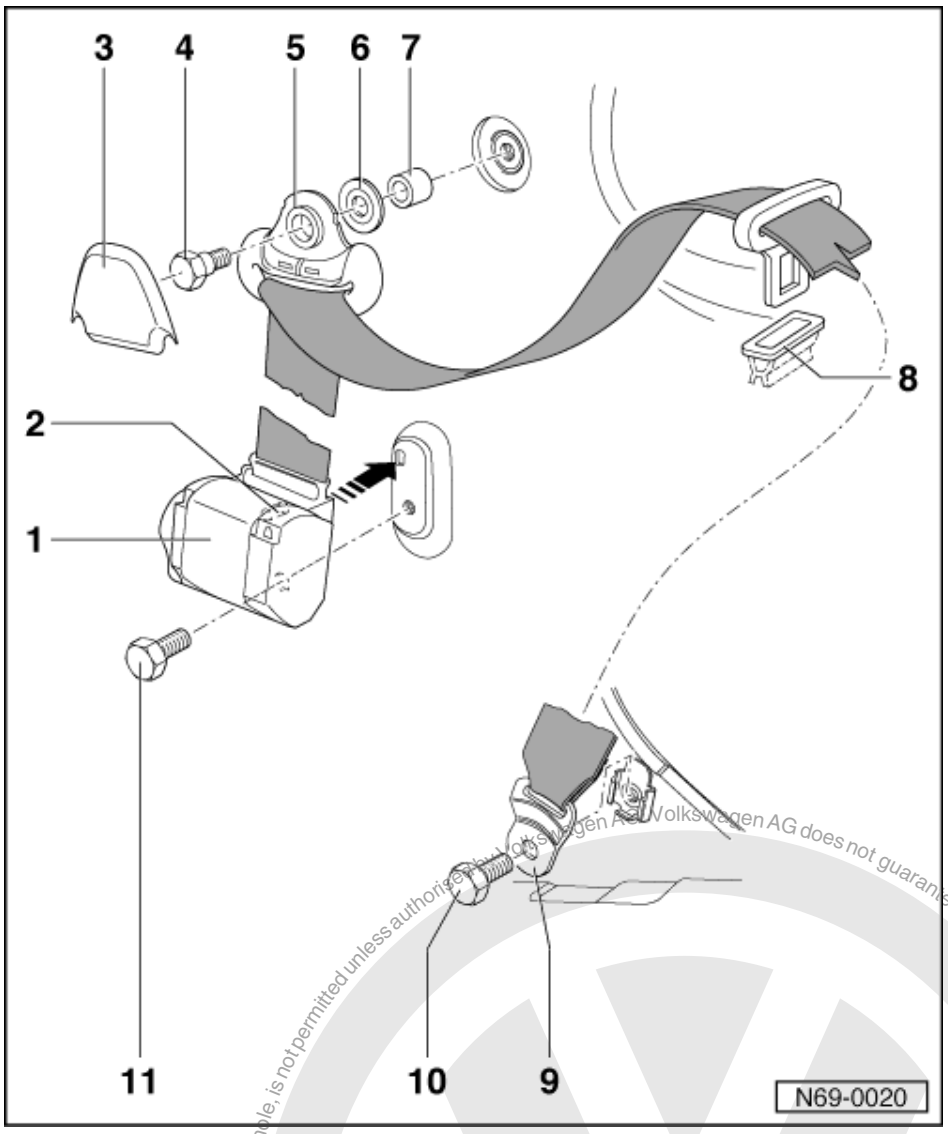

5 Belt relay
6 Special washer
7 Spacer
8 Mounting
- In C pillar trim

9 Rear anchor
10 Hexagon head bolt
- 40 Nm

11 Hexagon head bolt
- 40 Nm

Protected by copyright. Copying for private or commercial purposes, in part or in whole, is not permitted unless authorised by Volkswagen AG. Volkswagen AG does not guarantee or accept any liability with respect to the correctness of information in this document. Copyright by Volkswagen AG.
satelettronica

1.13 - Removing and installing rear inertia reel (Polo Estate)

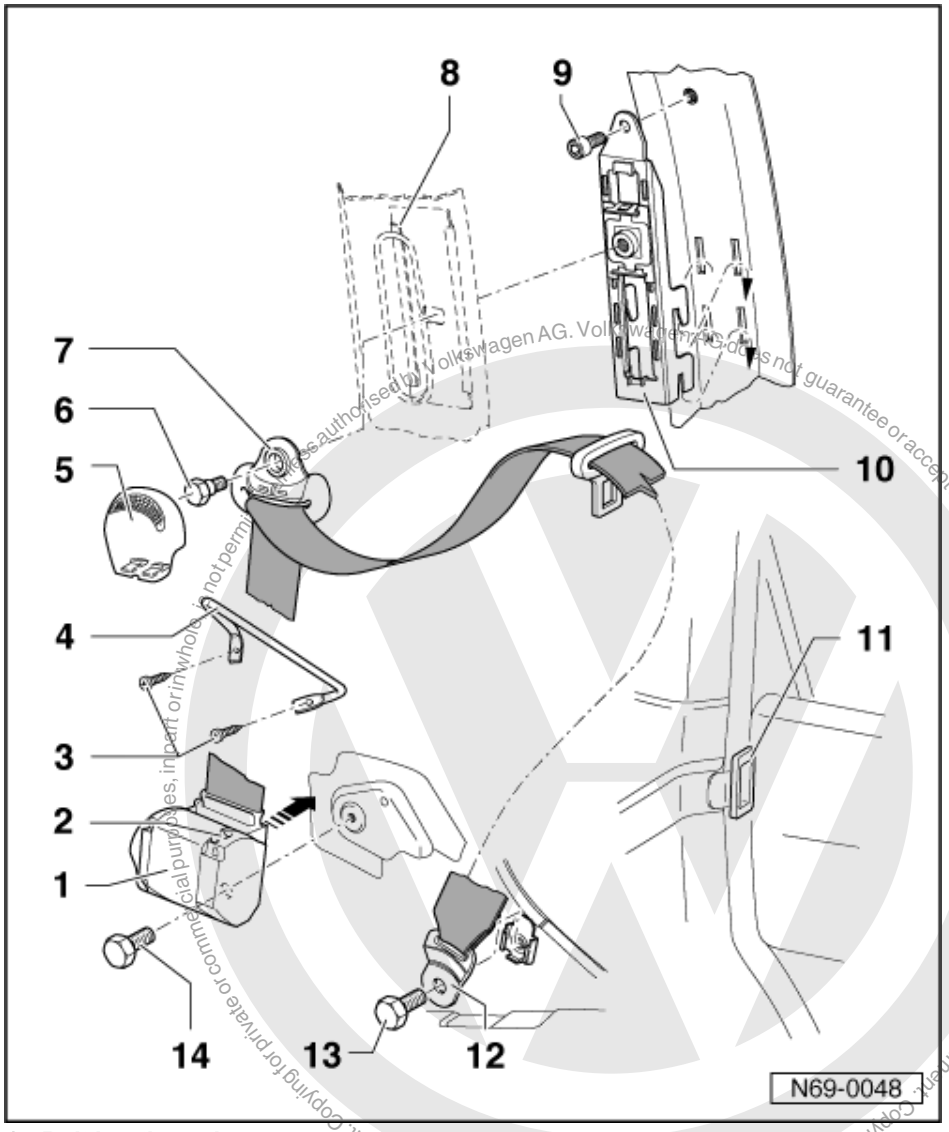

1 Belt inertia reel
- Removing:
- Remove load area cover => Page 26 .
- Remove C pillar lower trim => Page 126 .
- Locating lug - 2 - positions inertia reel -arrow-

2 Locating lug

3 Cross-head screw

4 Belt guide
- Secured with 2 cross-head screws
- 1.5 Nm

5 Cover
- Pushed on

satelettronica

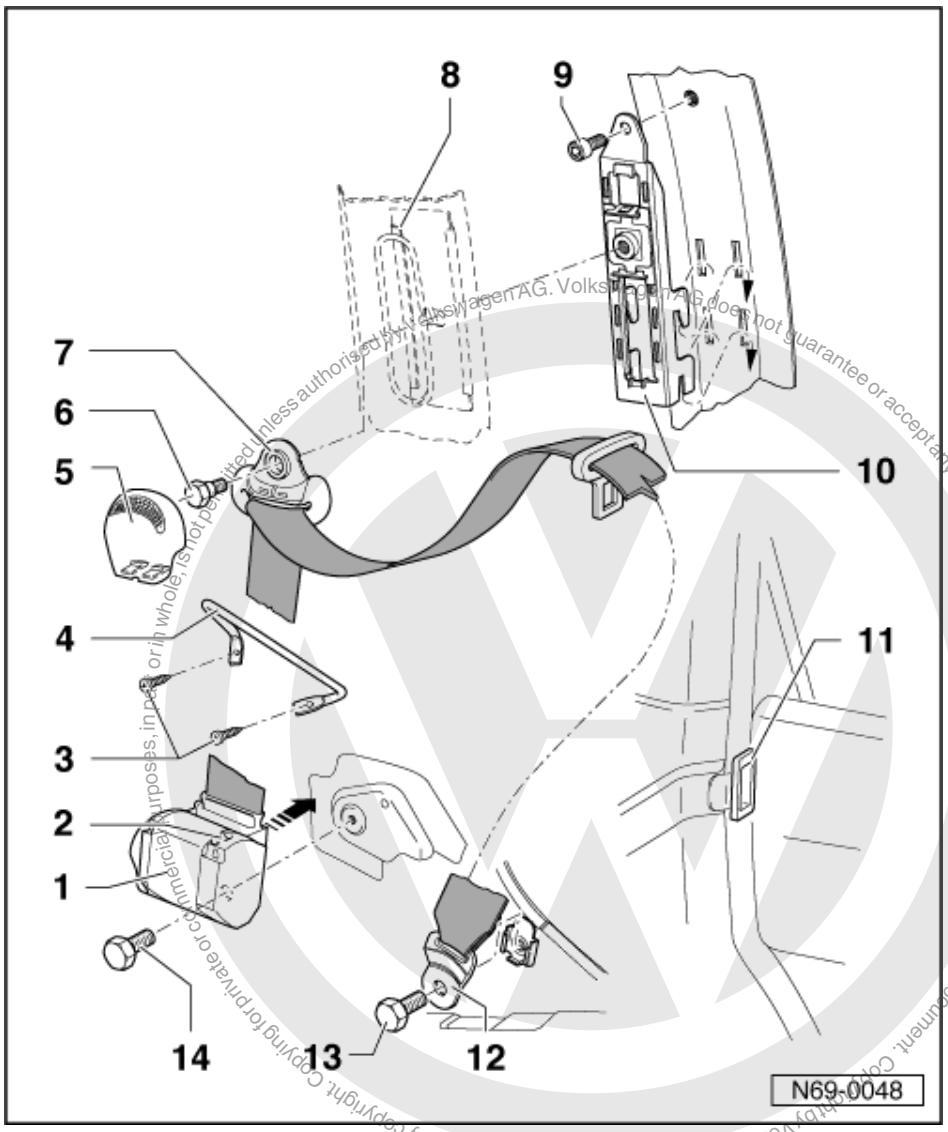

6 Hexagon bolt
- 40 Nm

7 Belt relay

8 Slide

9 Socket head screw
- 23 Nm

10 Belt height adjustment fitting

11 Mounting
- In C pillar trim

12 Rear anchor

13 Hexagon head bolt
- 40 Nm

14 Hexagon head bolt
- 40 Nm

Protected by copyright. Copying for private or commercial purposes, in part or in whole, is not permitted unless authorised by Volkswagen AG. Volkswagen AG does not guarantee or accept any liability with respect to the correctness of information in this document. Copyright by Volkswagen AG.
satelettronica

1.14 - Removing and installing lap belt and double latch

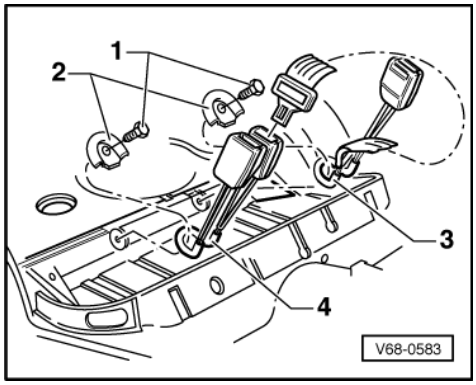

1 - -> Hexagon head bolt 40 Nm
2 - Cover cap
3 - Lap belt
4 - Double latch

2 - Inspecting seat belts

2.1 - Inspecting seat belts

Warning!
After every accident the seat belt system must be inspected systematically! If damage is determined when inspecting the check points, customer must be informed regarding necessity of changing belts.

Check points:

- Check webbing strap.
- Check inertia reel (locking effect).
- Visually check belt lock.
- Check belt lock function.
- Check belt guides and lock tongue.
- Check securing parts and anchorage points.
- Checking lap belt automatic retractor.

Note:

If customer refuses to have a damaged seat belt renewed, appropriate note should be made.

Checking webbing strap

- Pull belt completely out of inertia reel or lap belt adjustment tongue.
- Inspect belt straps for dirt and, if necessary, wash with mild soap solution=> also refer to Instruction Manual.

- If either of the following illustrated damage examples (1 and 2) are determined on accident vehicle - renew seat belt complete with belt lock.
- If damage as illustrated under points 1, 2 or 3 is determined on vehicle which has not been involved in an accident, it is sufficient to renew damaged belt only.

Copyright by Volkswagen AG. Volkswagen AG does not guarantee or accept any liability with respect to the correctness of information in this document. Copying for private or commercial purposes, in part or in whole, is not permitted unless authorised by Volkswagen AG.
satelitronica

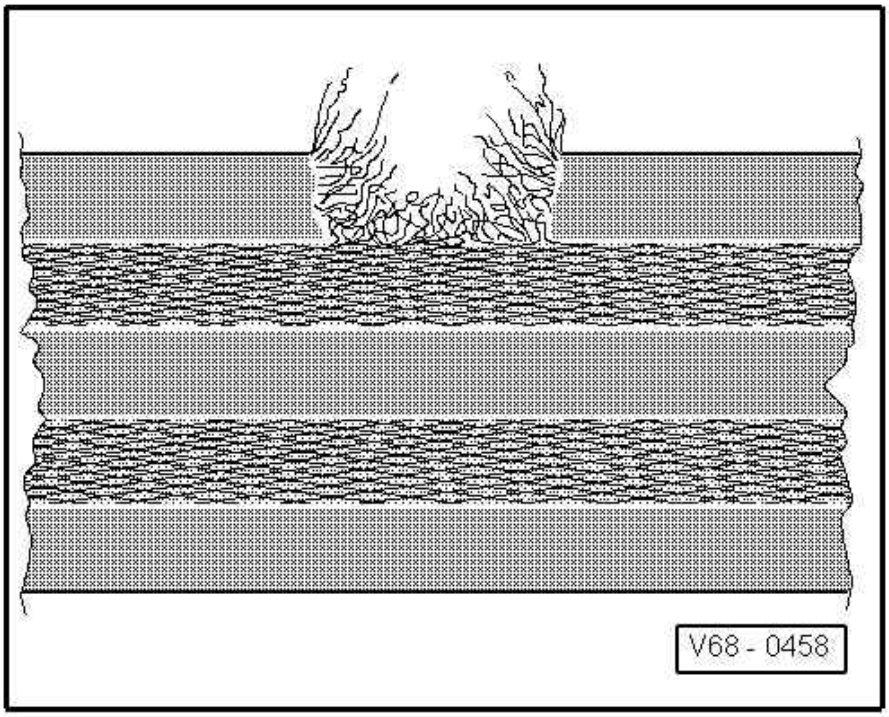

1 - -> Belt webbing cut, torn or chafed.

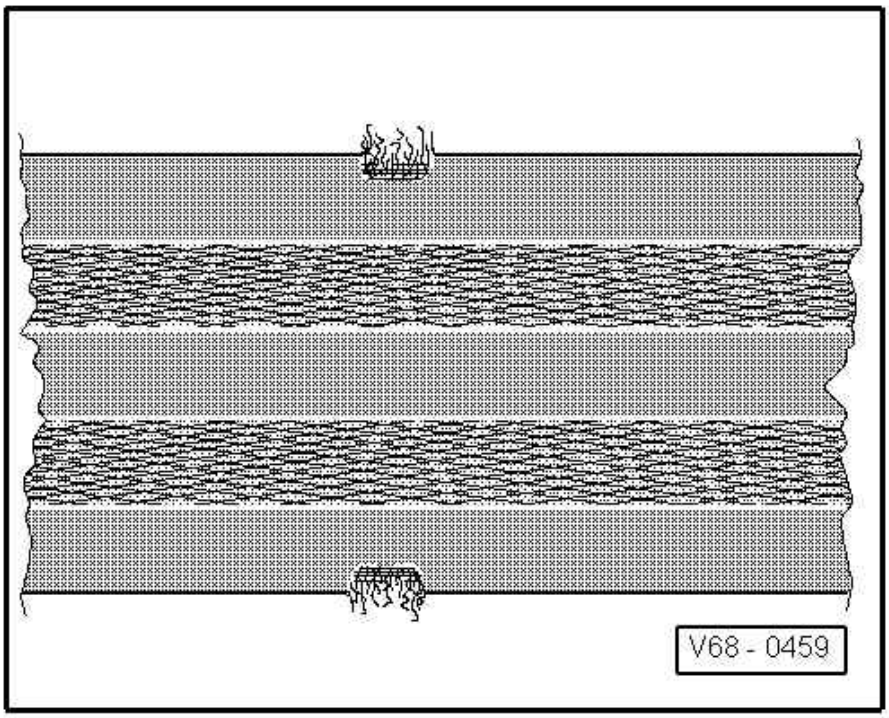

2 - -> Webbing loops on belt edge torn.

satelettronica
AG does not guarantee or accept any liability with respect to the correctness of information in this document. Copyright by Volkswagen AG.
Protected by copyright. Copyright

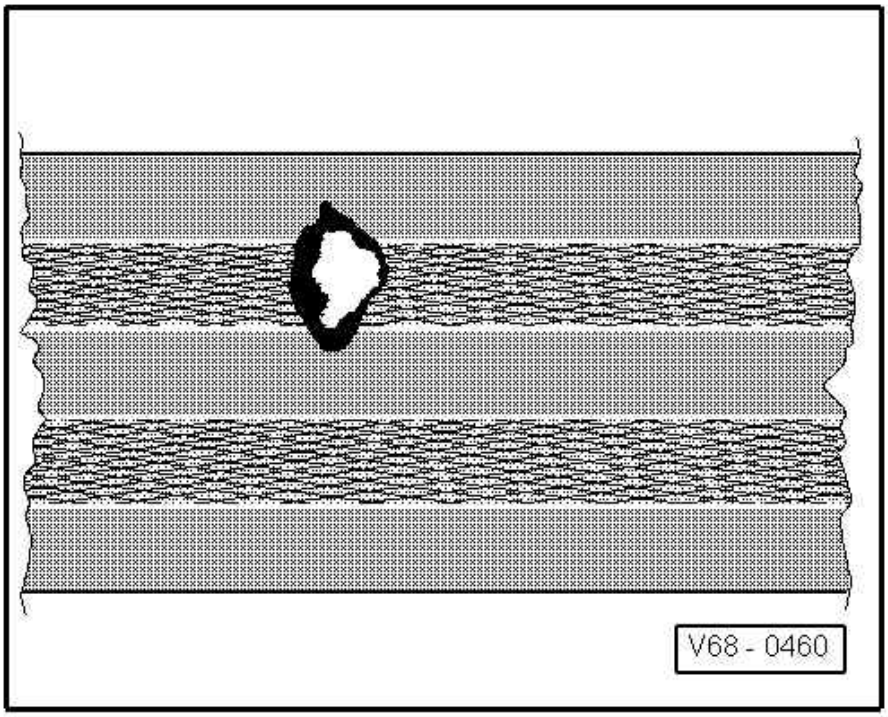

3 - -> Burn marks from cigarettes or similar.

Checking inertia reel (locking effect)

Inertia reel has two locking functions.

- First locking function is initiated by belt being jerked out of reel (belt extraction acceleration).

Checking

- Pull belt out of inertia reel with firm jerk.

- No locking effect - renew seat belt complete with belt latch.
- If difficulties are experienced when pulling belt out or reeling belt in, first check whether position of inertia reel has been altered.

- Second locking function is initiated by change in vehicle movement sequence (vehicle-dependent locking function).

Checking

- Fasten seat belt.
- Accelerate vehicle to 20 km/h and then carry out emergency braking with foot brake.

- If seat belt is not locked by locking mechanism during braking procedure, seat belt complete with belt latch must be renewed.

Warning!
For safety reasons, road test should be carried out on traffic-free stretch to ensure that other motorists/pedestrians etc. are not endangered.

Visually checking belt latch

- Inspect belt latch for cracks and fracturing.

satelettronica

- If damage is determined, renew seat belt complete with belt latch.

Belt latch - Functional check

Checking latch mechanism:

- Push locking tongue into belt latch until it engages audibly. Check whether locking mechanism is properly engaged by giving belt firm pull.

- If belt tongue fails even only once to engage properly in belt latch during at least 5 tests, seat belt complete with belt latch must be renewed.

Checking release mechanism:

- Release seat belt by pressing button on belt latch with finger pressure.

  When belt is slack, locking tongue must spring out of belt latch on its own.

- Carry out test at least 5 times. If belt tongue fails even only once to spring out of latch, seat belt complete with belt latch must be renewed.

Warning! Under no circumstances whatsoever may lubricant be used to eliminate noise or stiffness at belt latch buttons.

Checking belt guides and locking tongues

Plastic-covered guides show fine parallel scoring after strain on belt system (when belt was fastened during accident). (Wear which has been brought about by frequent belt use can be recognized by smooth signs of wear which are free of scoring).

- Inspect or deformation, fracturing and cracks in plastic.

- If scoring and/or damage is determined, renew seat belt complete with belt latch.

Checking securing parts and anchorage points

- Latch bracket deformed (stretched)
- Height adjustment fitting not working
- Anchorage point (seat, pillar, vehicle floor) distorted or thread damaged

- If damage is determined on these parts, renew seat belt complete with belt latch.
- Renew anchorage points.

Note:

In case of damage which is not result of an accident, but instead wear by way of example, only the part which is actually damaged need be renewed.

Protected by copyright. Copyright by Volkswagen AG.
Copyright by Volkswagen AG. Volkswagen AG does not guarantee or accept any liability with respect to the correctness of information in this document.
Copy for private or commercial purposes, in part or in whole, is not permitted unless authorised by Volkswagen AG.
satelettronica

3 - Airbag

3.1 - Airbag

3.2 - Tools

Special tools, workshop equipment, testers, measuring instruments and auxiliary items required

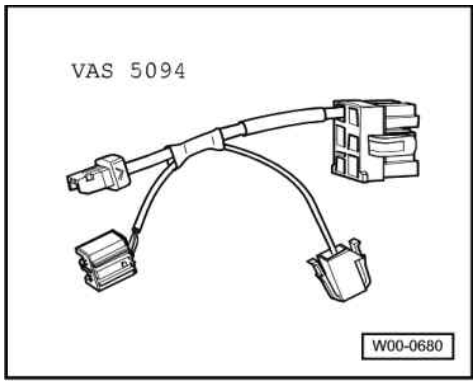

- -> VAS 5094 Airbag adapter

Protected by copyright. Copying for private or commercial purposes, in part or in whole, is not permitted unless authorised by Volkswagen AG. Volkswagen AG does not guarantee or accept any liability with respect to the correctness of information in this document. Copyright by Volkswagen AG.

satelettronica

3.3 - Locations overview (Caddy, Polo Classic 09.99 >, Polo Estate > 09.99)

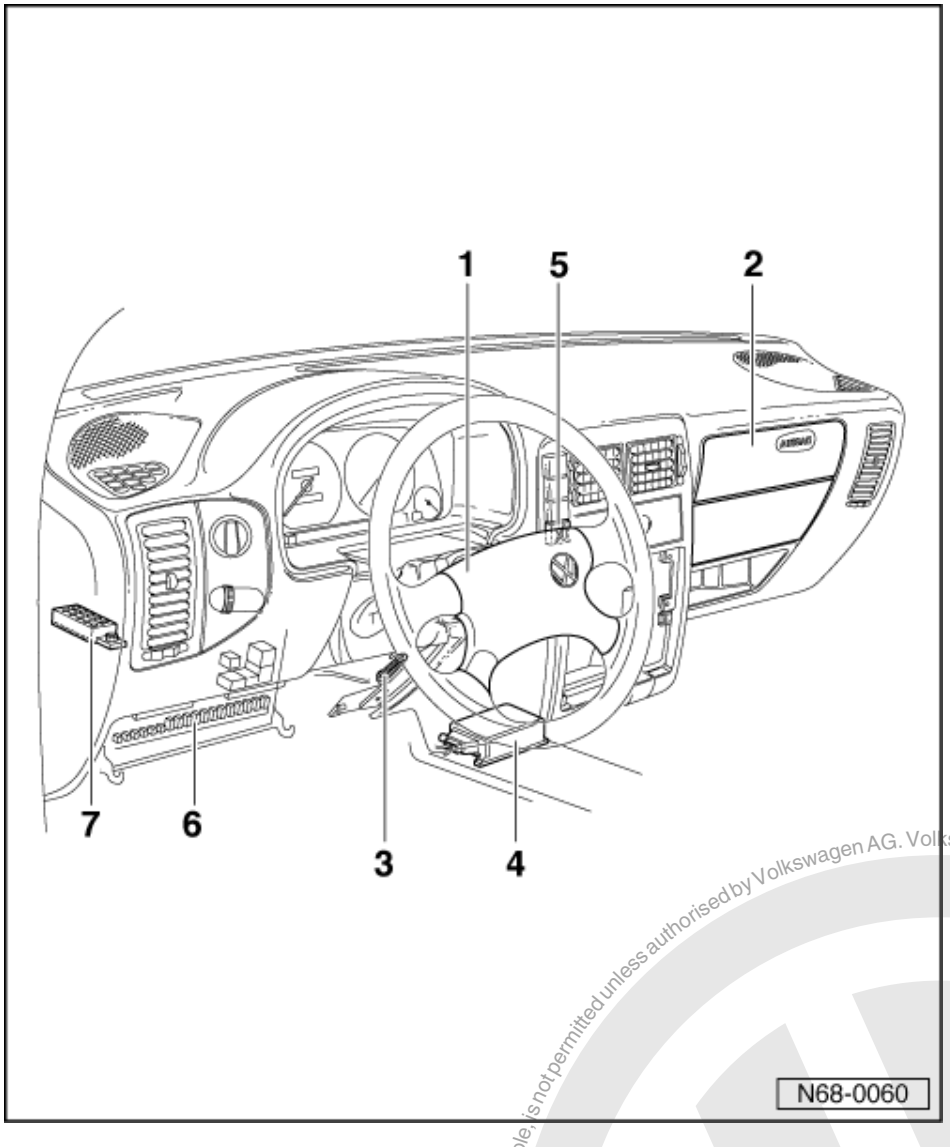

Older vehicles

1 Airbag unit driver's side
- Removing => Page 57

2 Airbag unit front passenger's side
- Removing => Page 69
- Deactivating and activating (adapting)

=> Body self-diagnosis; Repair group 01; Self-diagnosis for airbag system Self-diagnosis for airbag system

3 Diagnostic socket
4 Airbag control unit (J 234)
- Removing => Page 75

5 Airbag warning lamp (K 75)
6 Junction box
7 Earth strip

Protected by copyright. Copying for private or commercial purposes, in part or in whole, is not permitted unless authorised by Volkswagen AG. Volkswagen AG does not guarantee or accept any liability with respect to the correctness of information in this document. Copyright by Volkswagen AG.
satelettronica

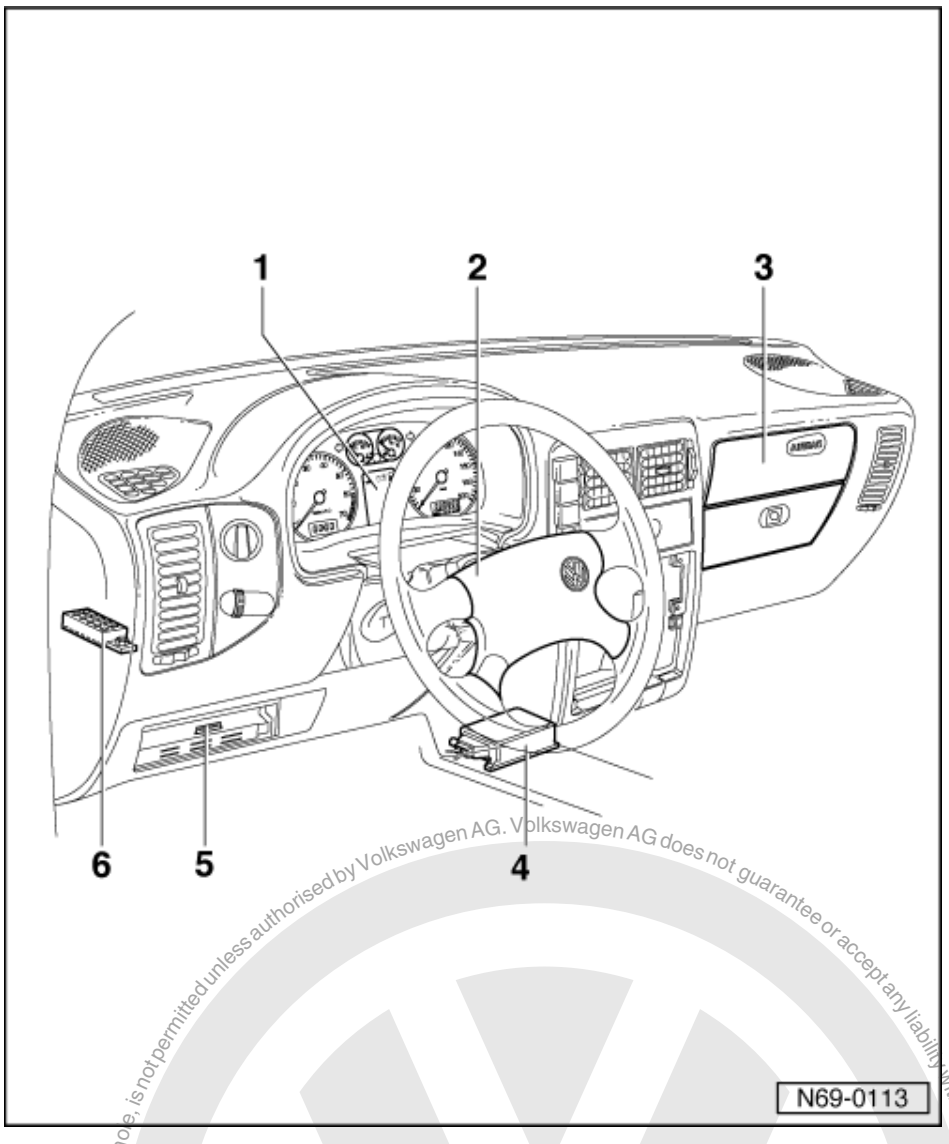

Newer vehicles

1 Airbag warning lamp (K 75)
2 Airbag unit driver's side
- Removing => Page 57

3 Airbag unit front passenger's side
- Removing => Page 69
- Deactivating and activating (adapting)

=> Body self-diagnosis; Repair group 01; Self-diagnosis for airbag system Self-diagnosis for airbag system

4 Airbag control unit (J 234)
- Removing => Page 75

5 Diagnostic socket
6 Earth strip

Protected by copyright. Copying for private or commercial purposes, in part or in whole, is not permitted unless authorised by Volkswagen AG. Volkswagen AG does not guarantee or accept any liability with respect to the correctness of information in this document. Copyright by Volkswagen AG.
satelettronica

3.4 - Locations overview (Polo Classic 10.99 >, Polo Estate 10.99 >)

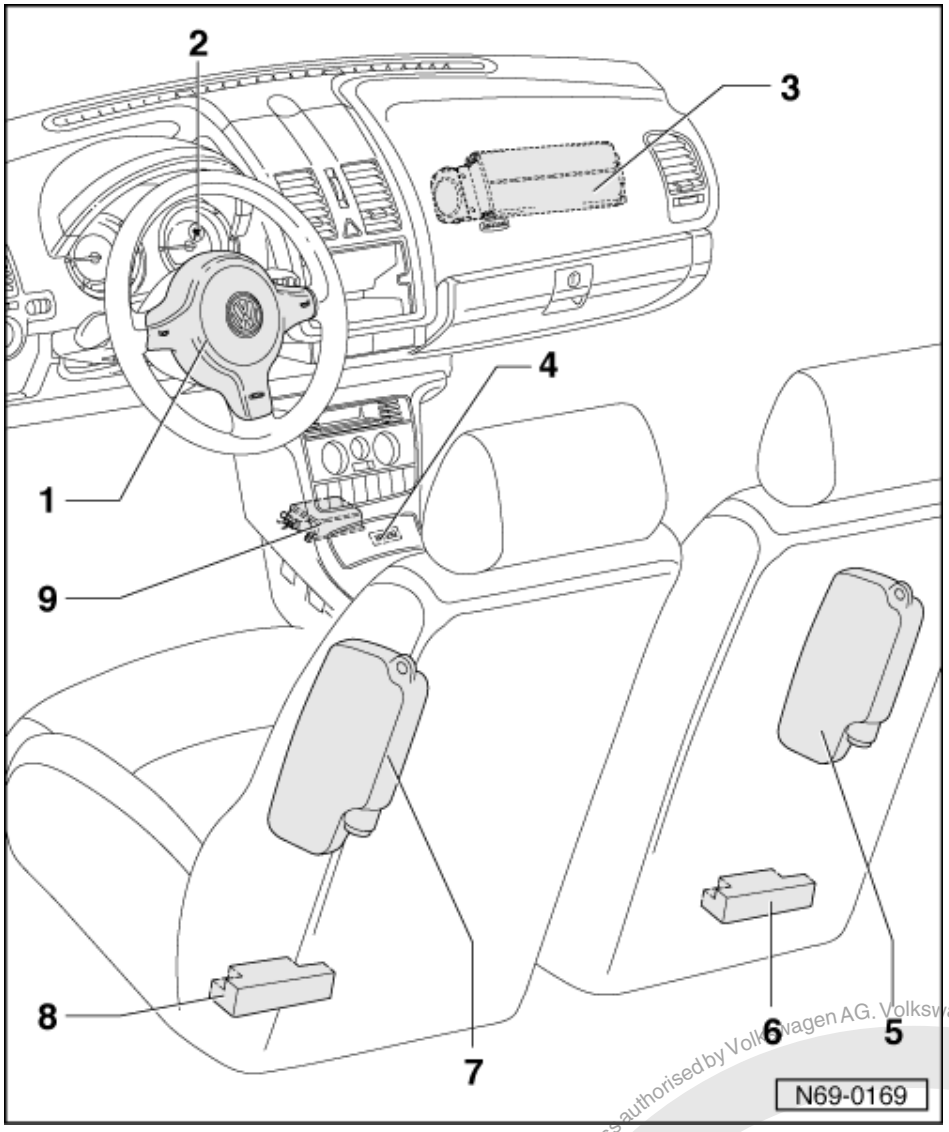

1 Airbag unit driver's side
- Removing => Page 60

2 Airbag warning lamp (K 75)

3 Airbag unit front passenger's side
- Removing => Page 73
- Deactivating and activating (adapting)

=> Body self-diagnosis; Repair group 01; Self-diagnosis for airbag system Self-diagnosis for airbag system

4 Diagnostic socket
- Below ashtray housing

5 Side airbag, front passenger's side
- Removing => Page 76

Protected by copyright. Copying for private or commercial purposes, in part or whole, is not permitted unless authorised by Volkswagen AG. Volkswagen AG does not guarantee or accept any liability with respect to the correctness of information in this document. Copyright by Volkswagen AG
satelettronica

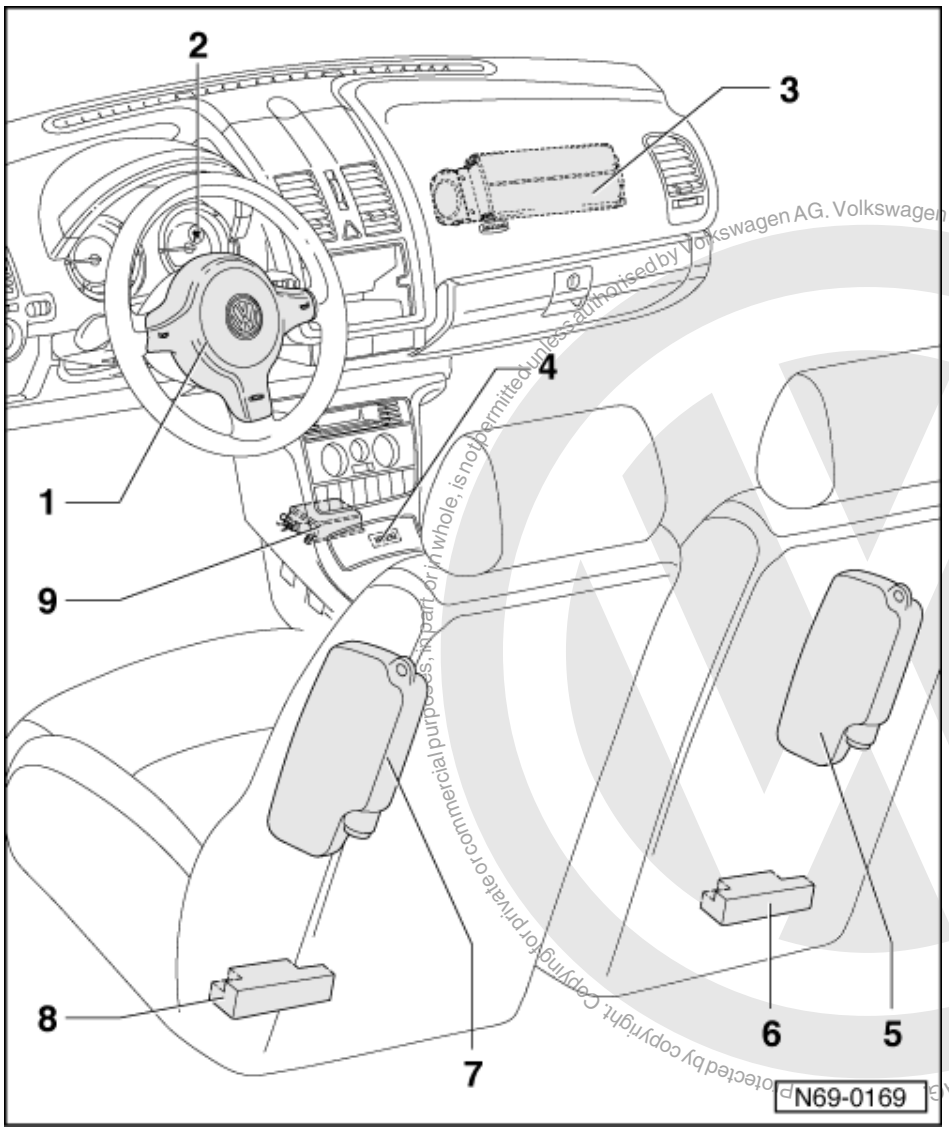

6 Sensor (side airbag, front passenger's side)
- Removing => Page 79

7 Side airbag, driver's side
- Removing => Page 76

8 Sensor (side airbag, driver's side)
- Removing => Page 79

9 Airbag control unit (J 234)
- Removing => Page 75

3.5 - Safety precautions when working on the airbag

- Testing, removing, installing and repair work may only be performed by qualified personnel.
- When working on the airbag system, the battery earth strap must be disconnected.
  No waiting time is necessary after disconnecting the battery.
  When connecting the airbag system to a voltage source, no person must be present inside the vehicle.
- Before picking up (touching) the airbag unit the mechanic must electrostatically discharge him/herself. This is achieved by touching a suitable metal part, for example, a water pipe, heater pipe or metal frame.
- The airbag units should be installed immediately after removing them from their packaging.
- If the work is interrupted, the airbag unit should again be placed in its packaging.

Copyright by Volkswagen AG. Volkswagen AG does not guarantee or accept any liability with respect to the correctness of information in this document. Copyright by Volkswagen AG. Protected by copyright. Copying for private or commercial purposes, in part or in whole, is not permitted unless authorised by Volkswagen AG.
satelettronica

- It is not permitted to leave the airbag unit unattended.

- Airbag units which have been removed should be stored so that the padded side is facing up.
- Airbag units which have dropped onto a hard surface or show signs of damage must not be installed in the vehicle.
- Airbag units which have not been activated should be marked and returned to the manufacturer for disposal (use airbag unit transport container).
- The storage and transportation complies with the legislation for explosive substances.
- Only install original seat covers that have been authorized for use with side airbags (recognisable by airbag label).
- The use of commercially available loose fitting covers is not permissible (loose fitting airbag suitable covers are in preparation).
- When installing the backrest cover ensure that the cover seam is straight in the area of the side airbag.

- Renew all cover clips.
- Only use original clips.
- For safety reasons always renew cover if damaged in area of side airbag - torn, burn holes etc. -.

3.6 - Replacing airbag units following an accident

Accident involving activation of airbag

Always exchange the following:

- All triggered airbag units with control units and sensors
- Support for front passenger module
- Coil connector with slip ring
- All seat belts with triggered belt tensioners
- In addition, the following must also be replaced if necessary (visual check):
  All damaged components

Accident not involving activation of airbag

- If the airbag warning lamp (K 75) does not indicate a fault, it is also not necessary to replace the airbag components. The seat belts should be checked separately.

After replacing the airbag units or the control unit, affix stickers (only tear-off strips) to the registration card and return the registration card to the relevant Sales Centre or to the Importer for registration.

The registration card 000 010 227 C must be ordered separately.

Protected by copyright. Copying for private or commercial purposes, in part or in whole, is not permitted unless authorised by Volkswagen AG. Volkswagen AG does not guarantee or accept any liability with respect to the correctness of information in this document. Copyright by Volkswagen AG.
satelettronica

3.7 - Removing and installing driver's airbag unit (Caddy, Polo Classic > 09.99, Polo Estate > 09.99)

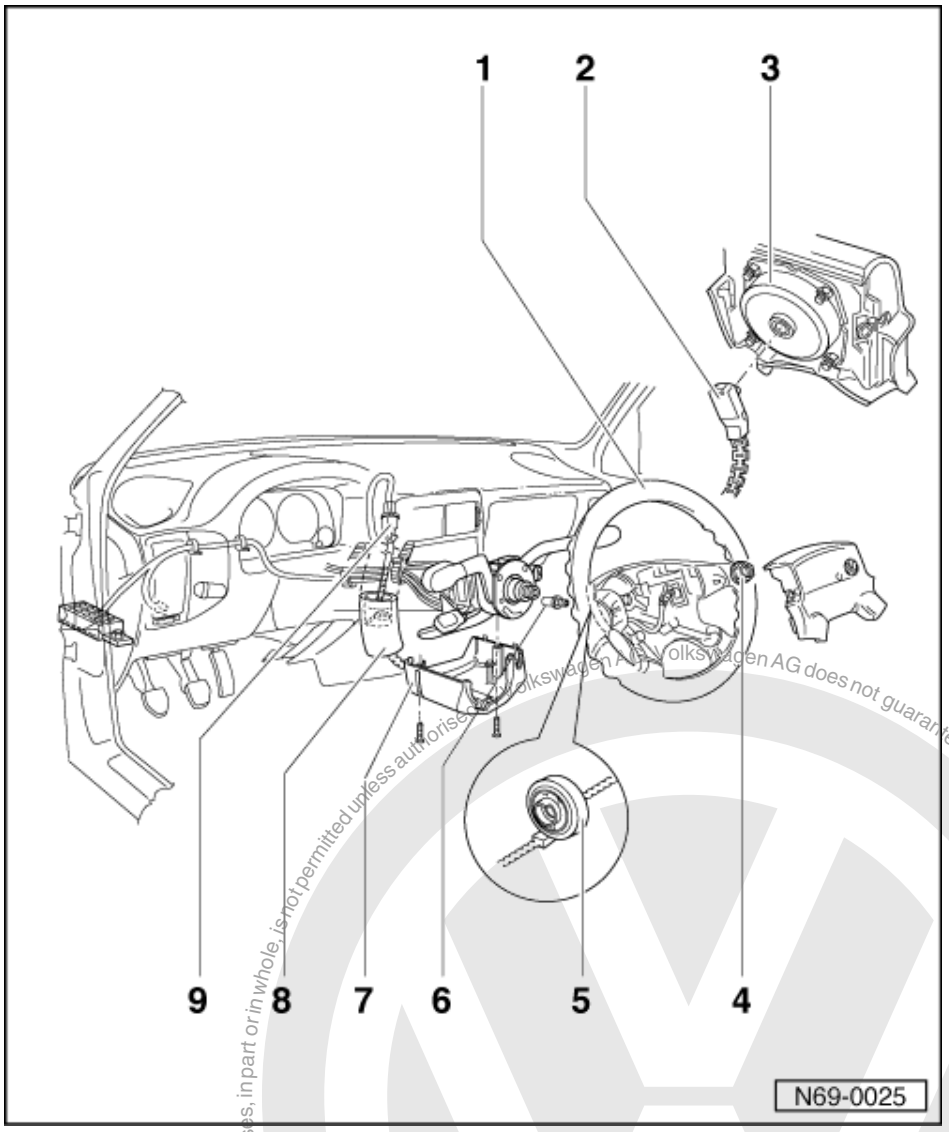

1 Steering wheel
- Removing => Page 63

2 Connector

3 Airbag unit

4 Hexagon combi-nut
- 50 Nm

5 Coil connector with slip ring
- Removing => Page 66

6 Socket head bolt
- 6.5 Nm
- Must always be replaced

7 Trim lower part

8 Foam tube

9 Connection

Protected by copyright. Copying for private or commercial purposes, in part or in whole, is not permitted unless authorised by Volkswagen AG. Volkswagen AG does not guarantee or accept any liability with respect to the correctness of information in this document. Copyright by Volkswagen AG.
satelettronica

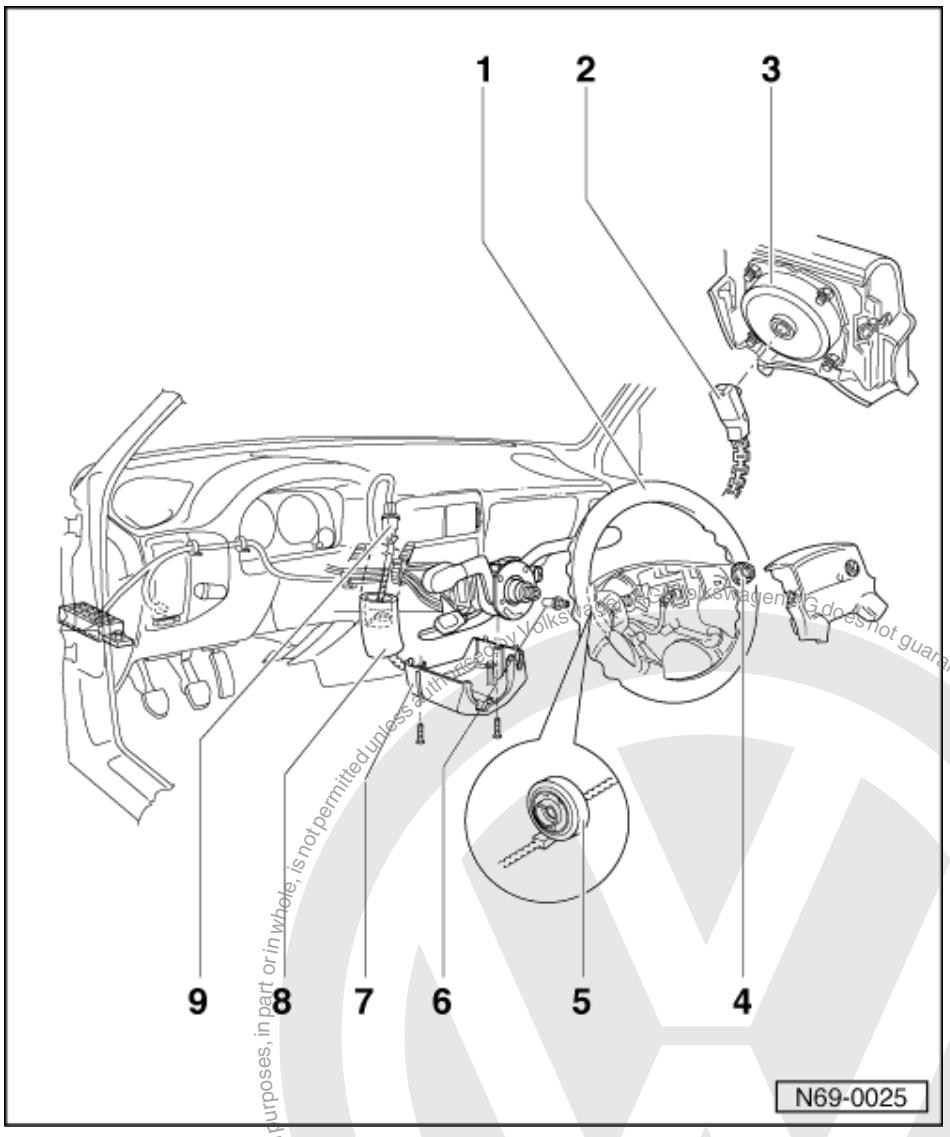

Protected by copyright. Copying for private or commercial purposes, in part or in whole, is not permitted unless authorised by Volkswagen AG. Volkswagen AG does not guarantee or accept any liability with respect to the correctness of information in this document. Copyright by Volkswagen AG.

satelettronica

Removing

- Disconnect battery earth strap.
- Steering wheel -1- to centre position (wheels in straight-ahead position).
- Unscrew socket head bolts -5- (6.5 Nm). Take airbag unit -3- off steering wheel and pull red connector -2- off airbag unit.

Installing

- Install airbag unit.
- Switch on ignition.
- Connect battery earth strap.

Warning!
Ensure that no person is present inside the vehicle.

3.8 - Removing and installing driver's airbag unit (Polo Classic 10.99 >, Polo Estate 10.99 >)

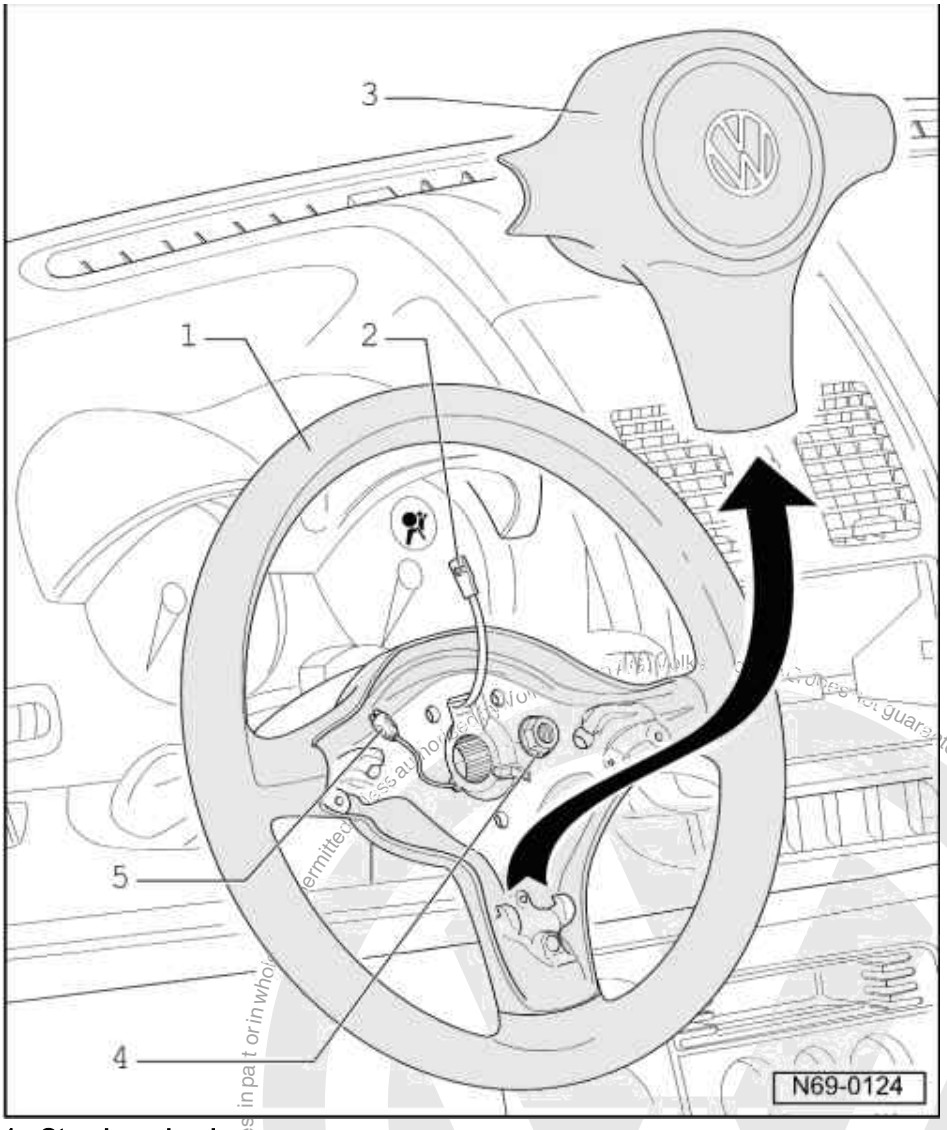

1 Steering wheel
- Removing => Page 64

2 Connector
- For airbag unit

3 Airbag unit
- Removing => Page 60

4 Hexagon combi-nut
- 50 Nm

5 Connector
- For horn

satelettronica
Protected by copyright. Copying for private or commercial purposes, in part or in whole, is not permitted unless authorised by Volkswagen AG. Copyright by Volkswagen AG. We do not guarantee or accept any liability with respect to the correctness of information in this document.

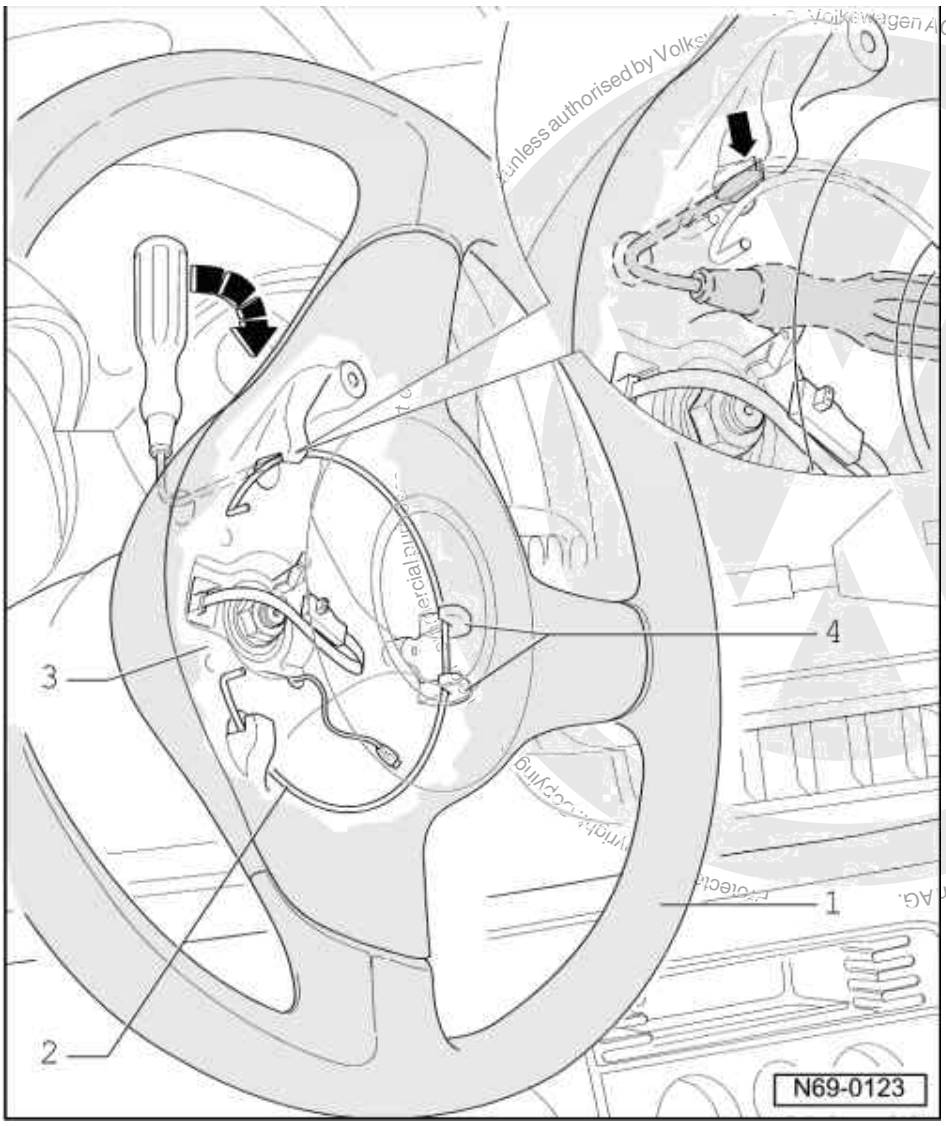

Unless authorised by Volkswagen AG, Volkswagen AG does not guarantee or accept any liability with respect to the correctness of information in this document. Copyright by Volkswagen AG.

satelettronica

Removing

Warning!
Disconnect battery earth strap before working on electrical system.

Warning!
Technicians must electrostatically discharge themselves by touching an earthed metal part, like e.g. water pipes, heating pipes or a metal frame.

Notes:

- Before disconnecting the battery see the note concerning the coding in the instruction manual for the radio.
- After reconnecting the battery, ensure vehicle equipment (radio, clock, electric windows) are checked as per Workshop manual/Owner's manual.

- Turn steering wheel - 1 - until horizontal steering wheel spokes are vertical. Pull out steering column completely and press down to lowest position.
- Insert a screwdriver, with approx. 5 mm wide blade and angled to give a length of 55 mm, from the reverse side into hole in steering wheel hub.
- Turn screwdriver through 90°, thereby pushing securing ring -2- off locking lugs in steering wheel hub and thereby releasing airbag unit on this side.
- Turn steering wheel back 180° and release second locking lug on opposite side.

satelettronica

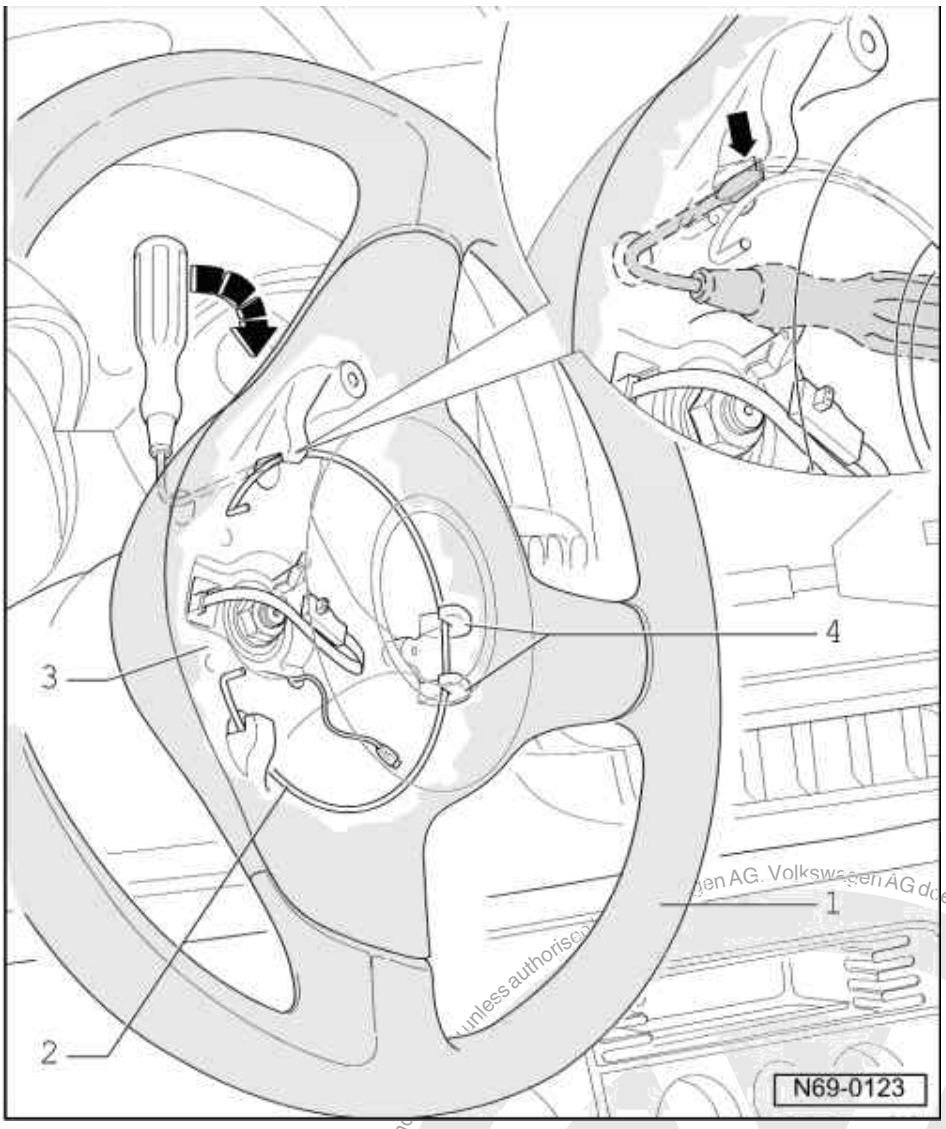

- Grasp airbag unit on horizontal spokes and push out of vertical anchorage.
- Pull connector off airbag unit.

Installing

- Fit connector onto airbag unit.
- Position airbag in installation position. Lock airbag unit by pressing on horizontal spoke section first and then on vertical section.
- Switch on ignition.

Warning! When connecting the battery earth strap ensure no person is in the vehicle.

- Connect battery earth strap.

Protected by copyright. Copying for private or commercial purposes, part or in whole, is not permitted unless authorised by Volkswagen AG. Volkswagen AG does not guarantee or accept any liability with respect to the correctness of information in this document. Copyright by Volkswagen AG.
satelettronica

3.9 - Removing and installing steering wheel (Caddy, Polo Classic > 09.99, Polo Estate > 09.99)

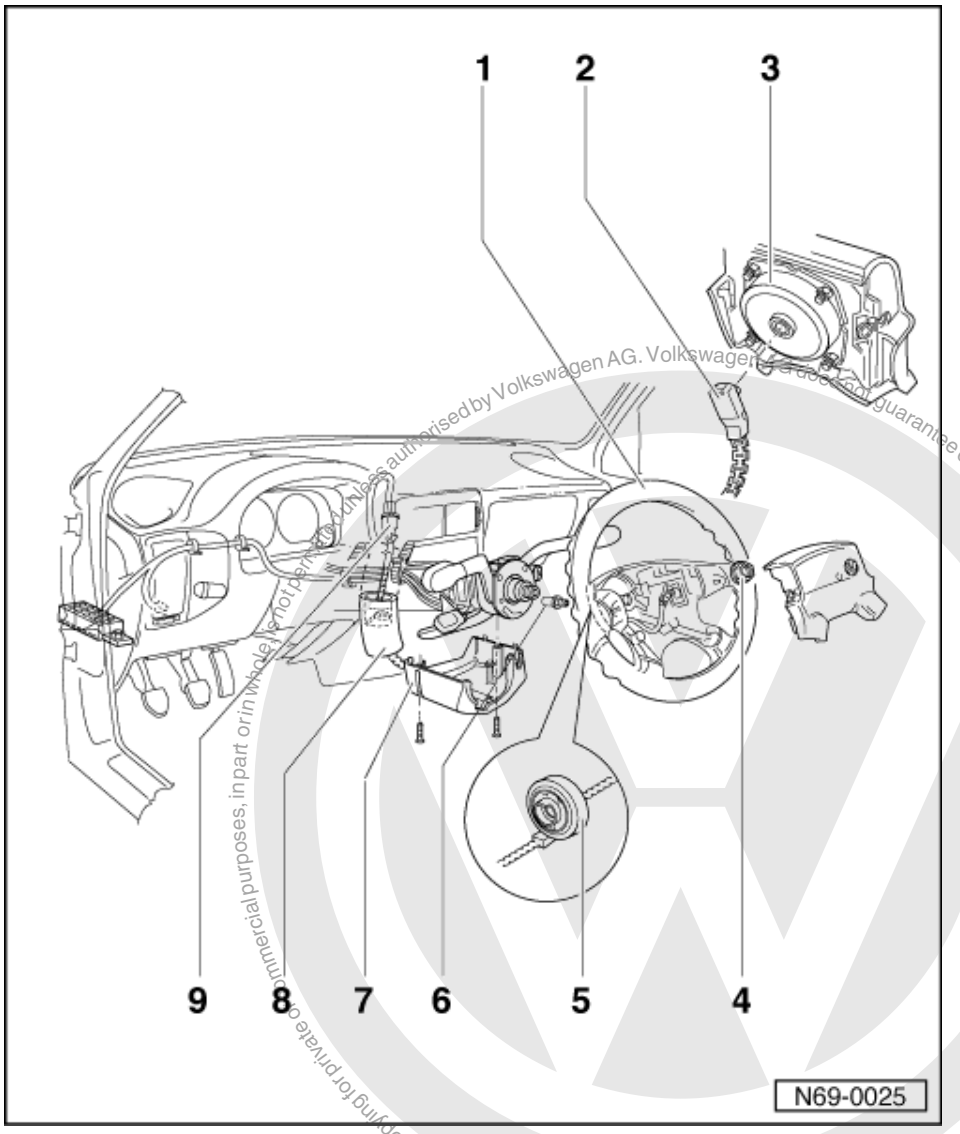

- Removing driver's airbag unit => Page 58 .
- Remove steering column switch lower trim section - 7 -.
- Pull foam tube -7- off the connector -8- and separate connector.
- Unscrew hexagon nut -4- and pull steering wheel off steering column (hexagon nut 50 Nm).

Coil connector with slip ring -9- remains on the steering wheel.

satelettronica

3.10 - Removing and installing steering wheel (Polo Classic 10.99>, Polo Estate 10.99 >)

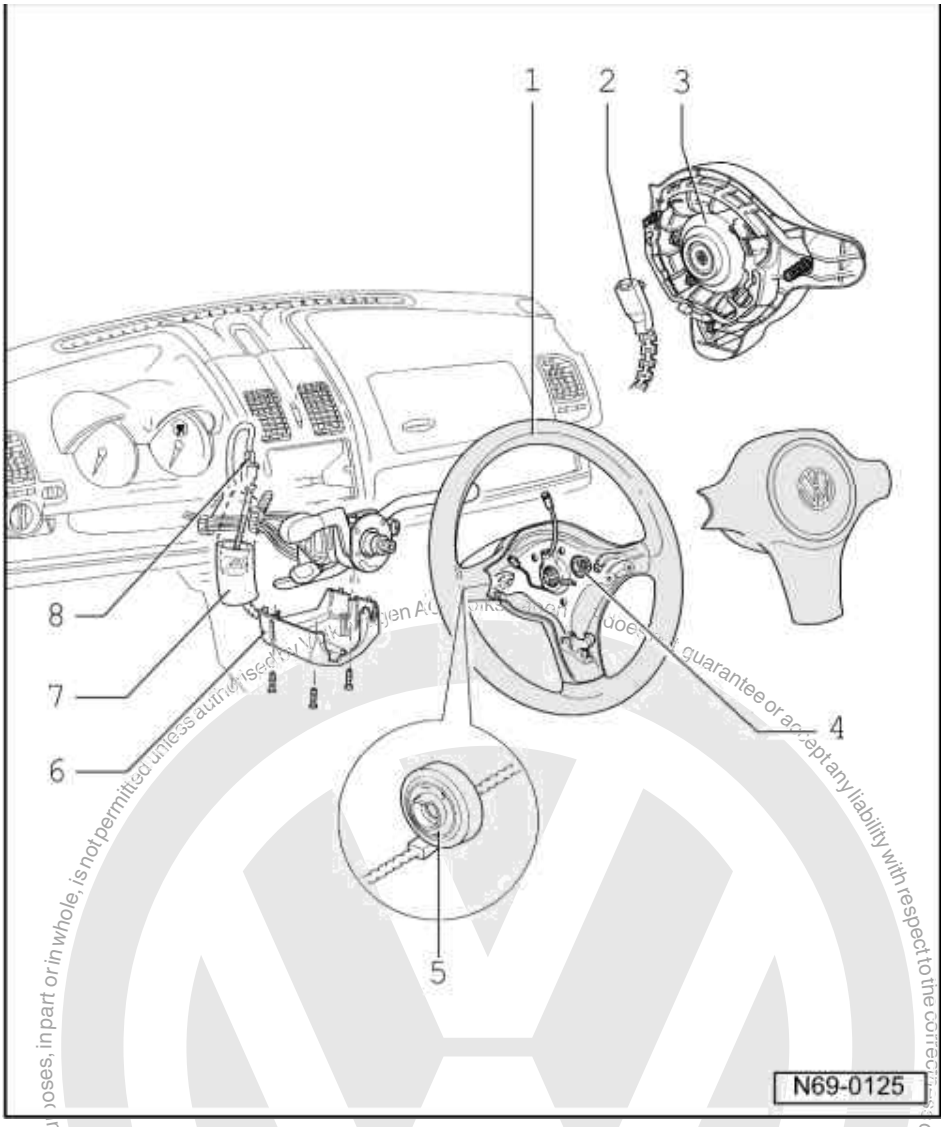

1 Steering wheel
- Removing => Page 65
- Installing => Page 66

2 Connector

3 Airbag unit

4 Hexagon combi-nut
- 50 Nm

5 Coil connector with slip ring
- Removing => Page 66

6 Trim lower section

7 Foam tube

8 Connector

satelettronica

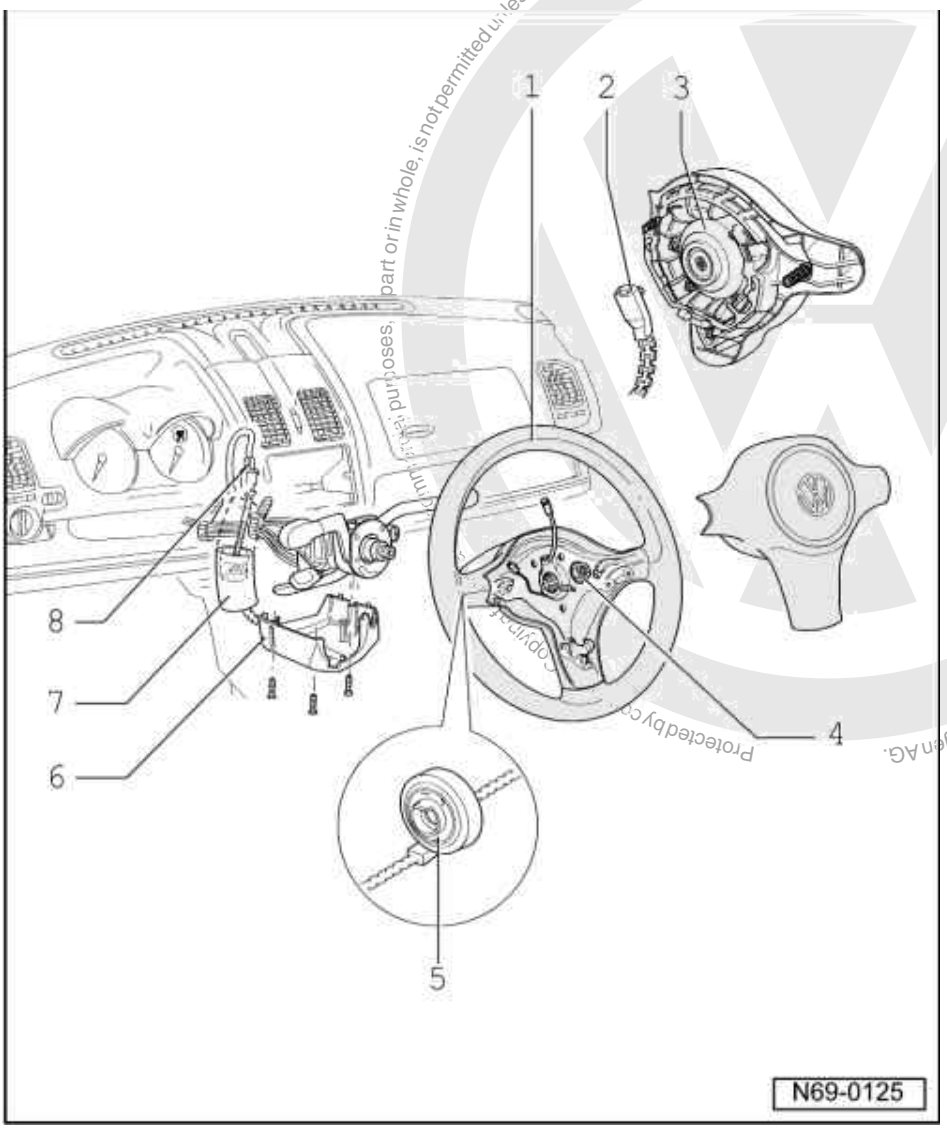

Removing

- Removing driver's airbag unit => Page 60 .
- Remove steering column switch lower trim section - 6 -.
- Pull foam tube - 7 - off the connector - 8 - and separate connector.
- Turn wheels to straight-ahead position.
- Remove hexagon nut - 4 - and pull steering wheel off steering column (hexagon nut 50 Nm).

Coil connector with slip ring - 5 - remains on the steering wheel.

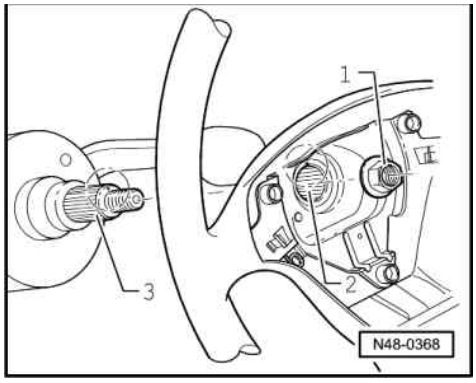

Protected by copyright. Copyright by Volkswagen AG. Volkswagen AG does not guarantee or accept any liability with respect to the correctness of information in this document. Copyright by Volkswagen AG. Reproduction, in part or in whole, is not permitted unless authorised by Volkswagen AG.
satelettronica

Installing

- -> Fit steering wheel so that the line marked on the steering wheel hub -2- and the centre punch mark on the steering column align -3-.

Steering columns supplied as a spare part do not have a centre punch mark.

They must be marked after performing alignment tests or a test drive.

Tightening torques:	
Hexagon collared nut -1- to steering column	50 Nm

3.11 - Removing and installing coil connector with slip ring (Caddy, Polo Classic > 09.99, Polo Estate > 09.99)

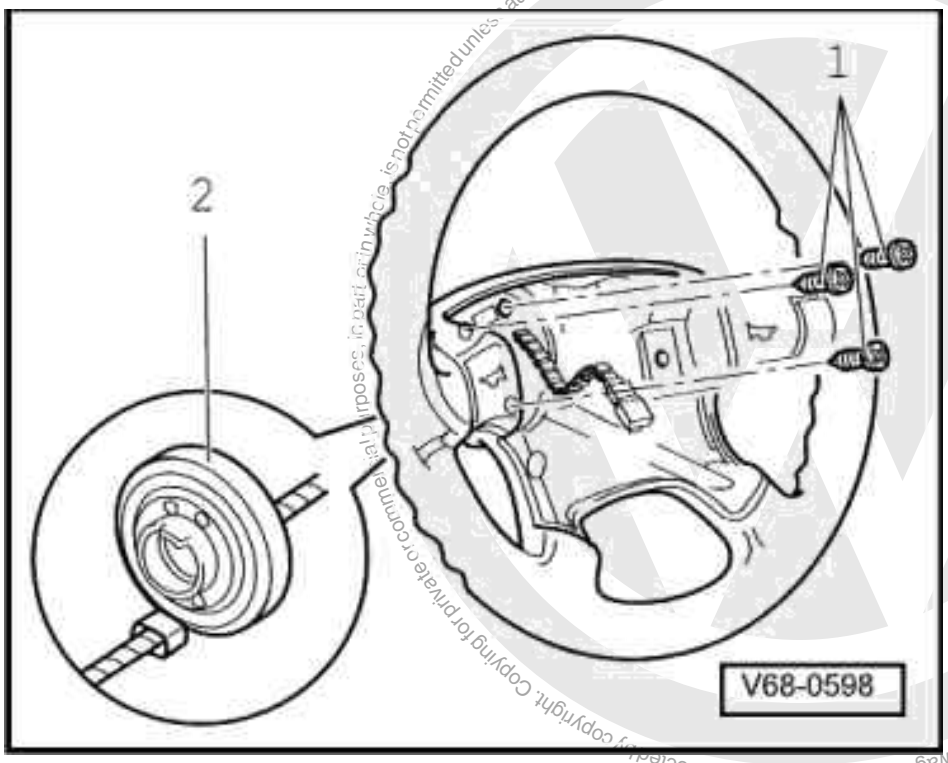

Driver airbag unit and steering wheel removed.

- Separate single connector for horn.
- -> Unscrew Phillips screws -1- and pull coil connector with slip ring -2- off the steering wheel.

Note:

The steering must be in the centre position (wheels in straight-ahead position) when the coil connector and slip ring are removed and installed.

Coil connector with slip ring is secured as a new part in the centre position with a cable tie.

Protected by copyright. Copying for private or commercial purposes, in part or in whole, is not permitted unless authorised by Volkswagen AG. Volkswagen AG does not guarantee or accept any liability with respect to the correctness of information in this document. Copyright by Volkswagen AG.
satelettronica

3.12 - Removing and installing coil connector with slip ring (Polo Classic 10.99>, Polo Estate 10.99>)

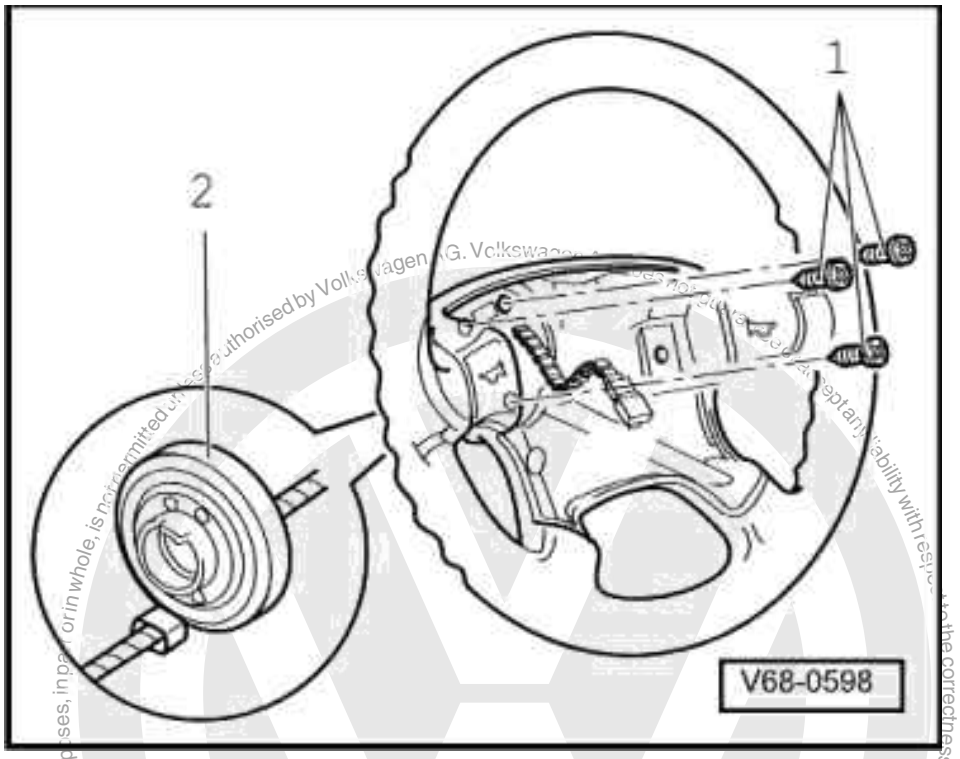

- Driver's airbag, steering wheel and lower steering column switch trim removed.

- Separate single connector for horn and connector from coil connector with slip ring.
- -> Unscrew Phillips screws -1- and pull coil connector with slip ring -2- off the steering wheel.

Notes:

- When removing and installing the coil connector with slip ring, ensure that the coil connector is in the centre position.
- As a new part the coil connector with slip ring is secured in the centre position by a cable tie.

The following work sequence is valid only for vehicles with Electronic stability programme -ESP-

Vehicles with ESP are additionally equipped with a steering angle sensor -G85. The sensor is installed together with the coil connector and slip ring in a housing.

- Front wheel and steering wheel must be in straight-ahead position.

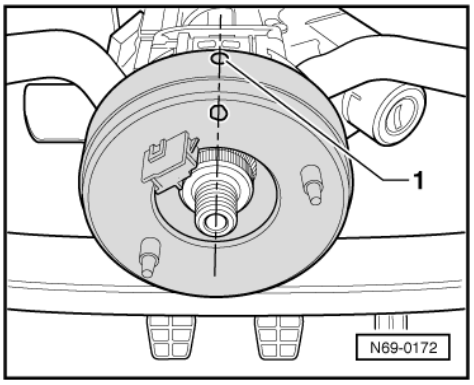

- If necessary position front wheels in straight-ahead position and remove steering wheel.
- -> Position steering wheels in central position;
  A yellow spot must be visible in hole -1-.

satelettronica

The markings must align.

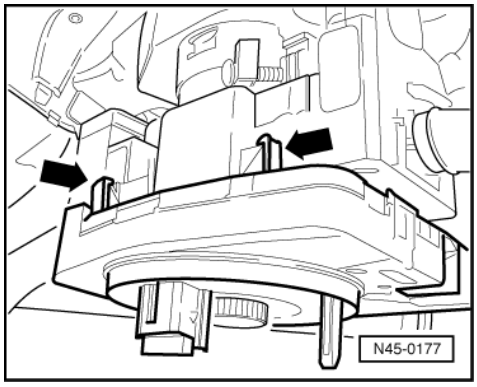

- Separate steering angle sensor connection.
- -> Lift hooks -arrows- carefully and pull off steering angle sensor.

Installing:

- Installation is carried out in the reverse sequence

For vehicles with -ESP- observe the following

When installing ensure steering angle sensor is correctly seated and is free of stress.

- Front wheel and steering wheel must be in straight-ahead position.
- Remove transportation protection on markings before installing a new steering angle sender.

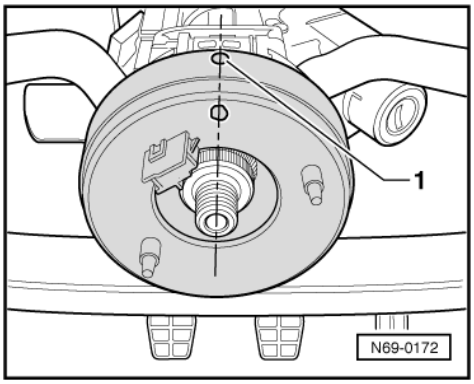

- Fit steering angle sensor, until lugs engage.
- -> Position steering angle sensor in central position;
  Yellow spot must be visible in hole -1-.
  The markings must align.
- Then a zero comparison must be performed.

=> Running gear self-diagnosis for ABS; Repair group 01; Performing self-diagnosis; Introducing basic setting
Performing self-diagnosis Introducing basic setting

Protected by copyright. Copying for private or commercial purposes, in part or in whole, is not permitted unless authorised by Volkswagen AG. Volkswagen AG does not guarantee or accept any liability with respect to the correctness of information in this document. Copyright by Volkswagen AG.
satelettronica

3.13 - Removing and installing front passenger's airbag unit (Caddy, Polo Classic > 09.99, Polo Estate > 09.99)

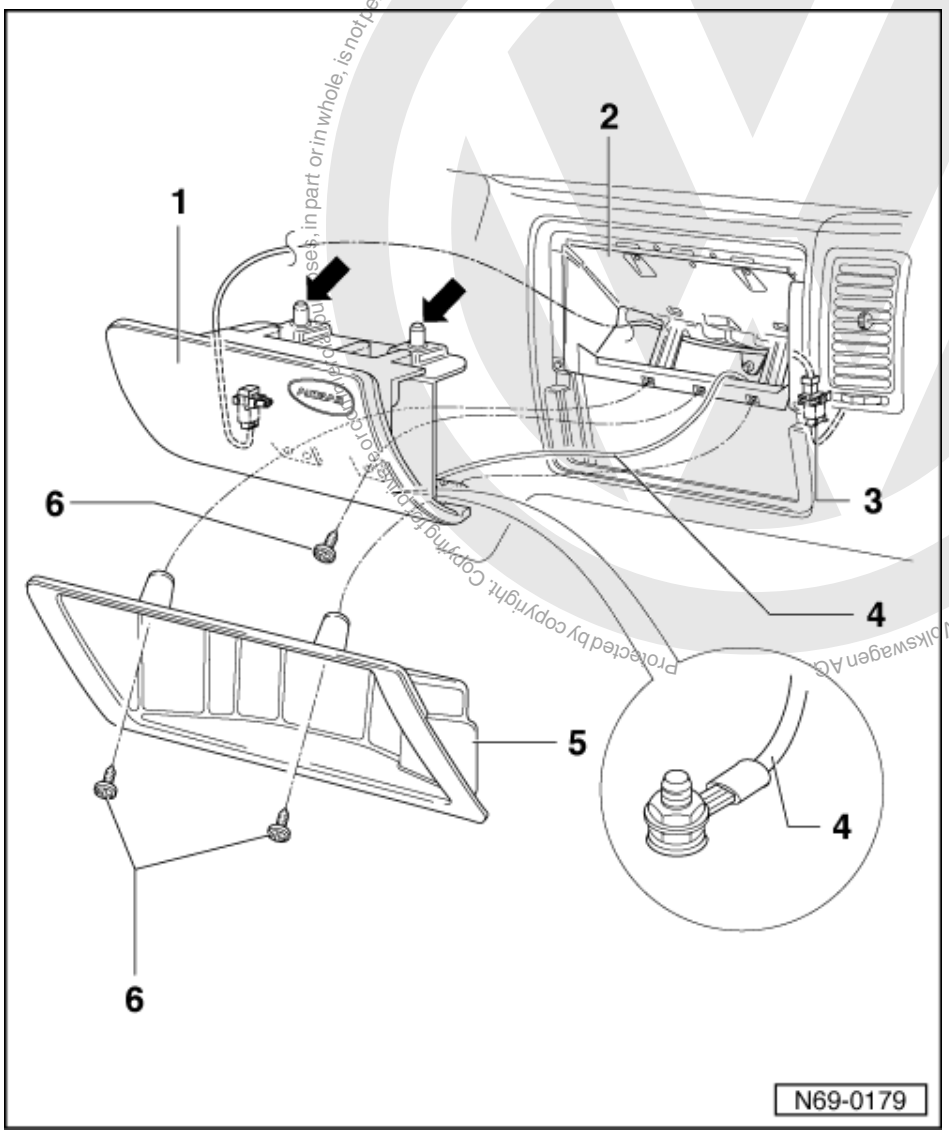

1 Front passenger's airbag unit

2 Mounting frame
- Must be replaced if airbag has triggered

3 Connector
- Clipped with retainer onto dash panel cut-out

4 Earth wire

5 Passenger side compartment
- Or glove compartment instead of stowage compartment depending on equipment

6 Cross-head screws

Protected by copyright. Copying for private or commercial purposes, in part or in whole, is not permitted unless authorised by Volkswagen AG. Volkswagen AG does not guarantee or accept any liability with respect to the correctness of information in this document. Copyright by Volkswagen AG.
satelettronica

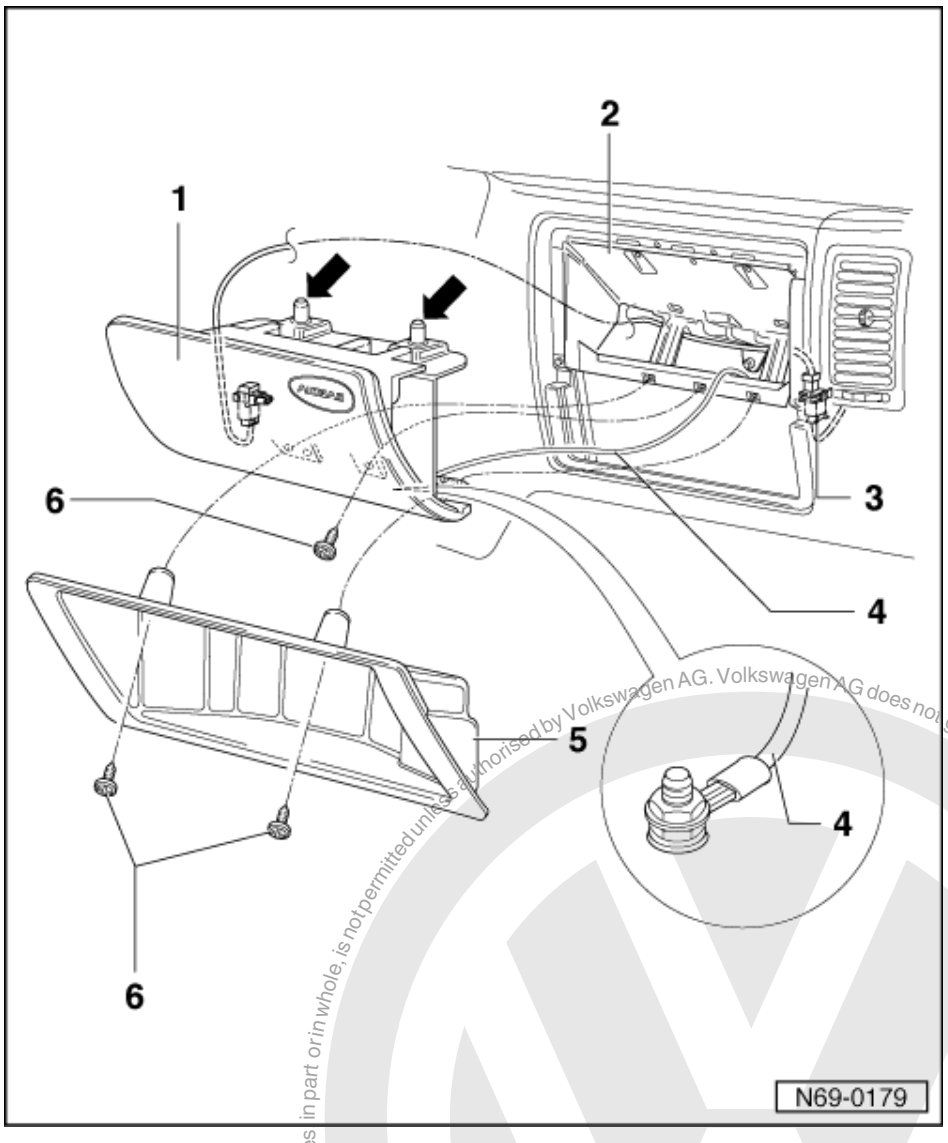

Removing

- Disconnect battery earth strap.
- Remove cross-head screws - 19 .
- Remove cross-head screw - 6 - from airbag unit -1-. Loosen bottom part of airbag unit on dash panel and pull out of the retaining frame -2- (take note of pins at top -arrows-).
- Unscrew earth wire - 4 - from airbag unit housing.
- Separate airbag unit connector -3- and unclip wire from retaining frame -2-.

Protected by copyright. Copying for private or commercial purposes, in part or in whole, is not permitted unless authorised by Volkswagen AG. Volkswagen AG does not guarantee or accept any liability with respect to the correctness of information in this document. Copyright by Volkswagen AG.
satelettronica

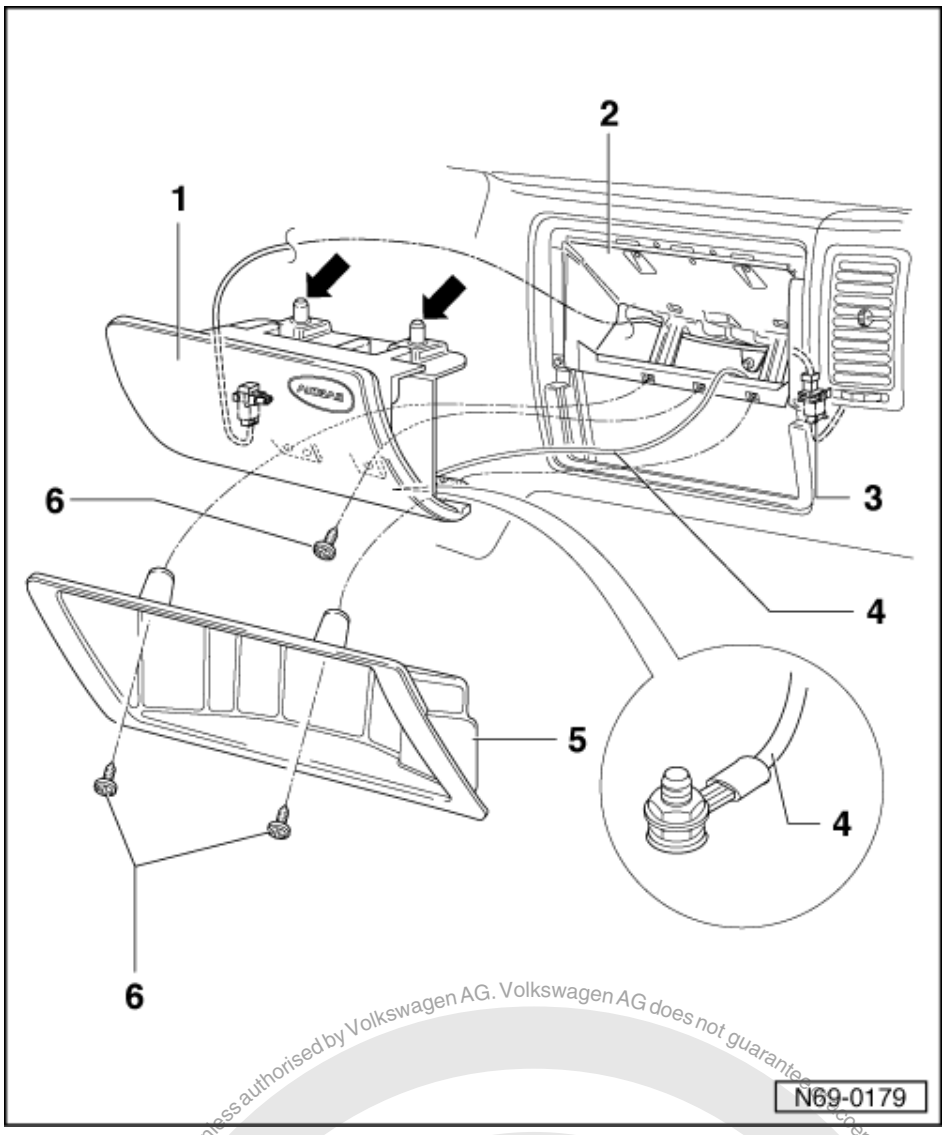

Installing

- Install airbag unit.
- Switch on ignition.
- Connect battery earth strap.

Warning! Ensure that no person is present inside the vehicle.

Protected by copyright. Copying for private or commercial purposes, in part or in whole, is not permitted unless authorised by Volkswagen AG. Volkswagen AG does not guarantee or accept any liability with respect to the correctness of information in this document. Copyright by Volkswagen AG.

satelettronica

3.14 - Removing and installing front passenger's airbag unit (Polo Classic 10.99 >, Polo Estate 10.99 >)

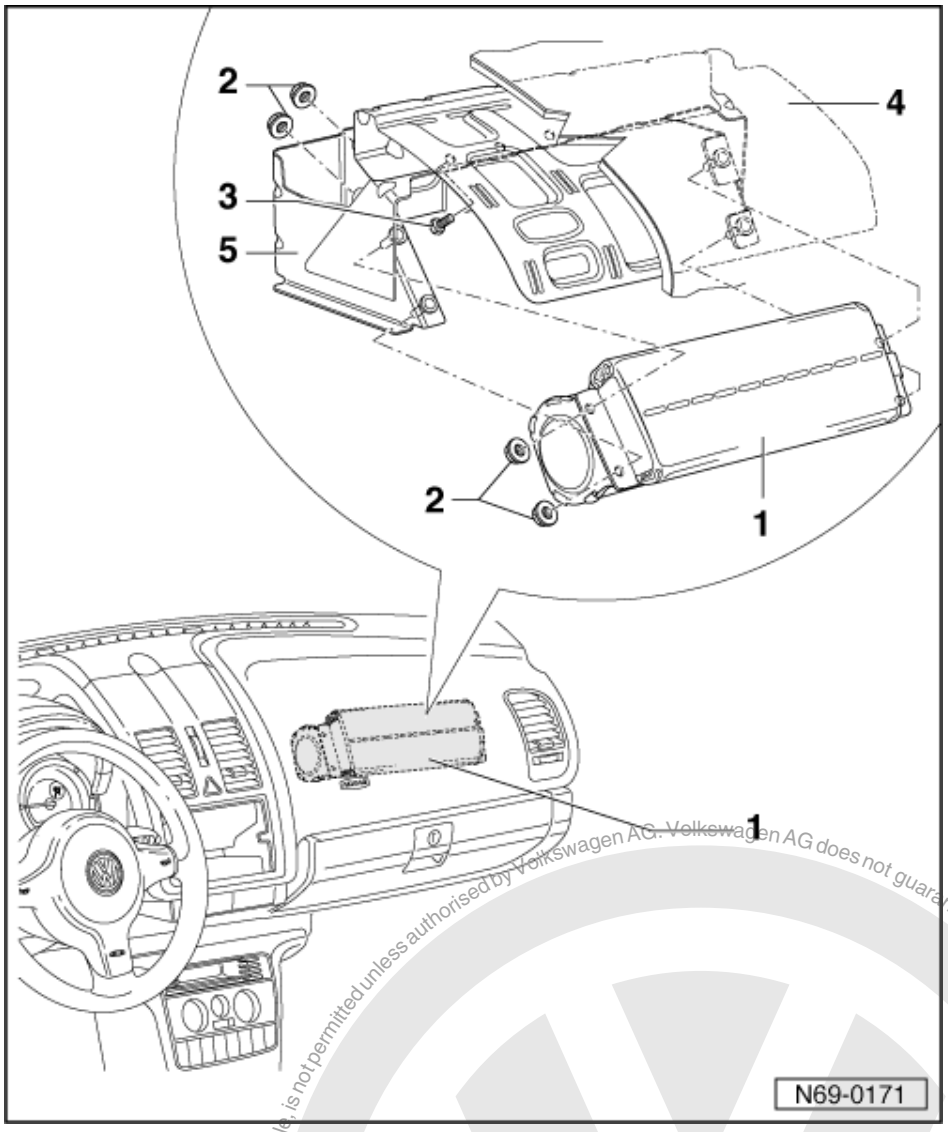

1 **Front passenger's airbag unit**
- Removing => Page 73
- Installing => Page 74

2 **Hexagon nut**
- Qty. 4
- 8 Nm

3 **Hexagon head bolt**
- Connects airbag guide plate with mounting frame - 2 -
- Qty. 5
- 8 Nm

4 **Dash panel**

5 **Mounting frame**
- Must be replaced if airbag has triggered

Protected by copyright. Copying for private or commercial purposes, in part or in whole, is not permitted unless authorised by Volkswagen AG. Volkswagen AG does not guarantee or accept any liability with respect to the correctness of information in this document. Copyright by Volkswagen AG.
satelettronica

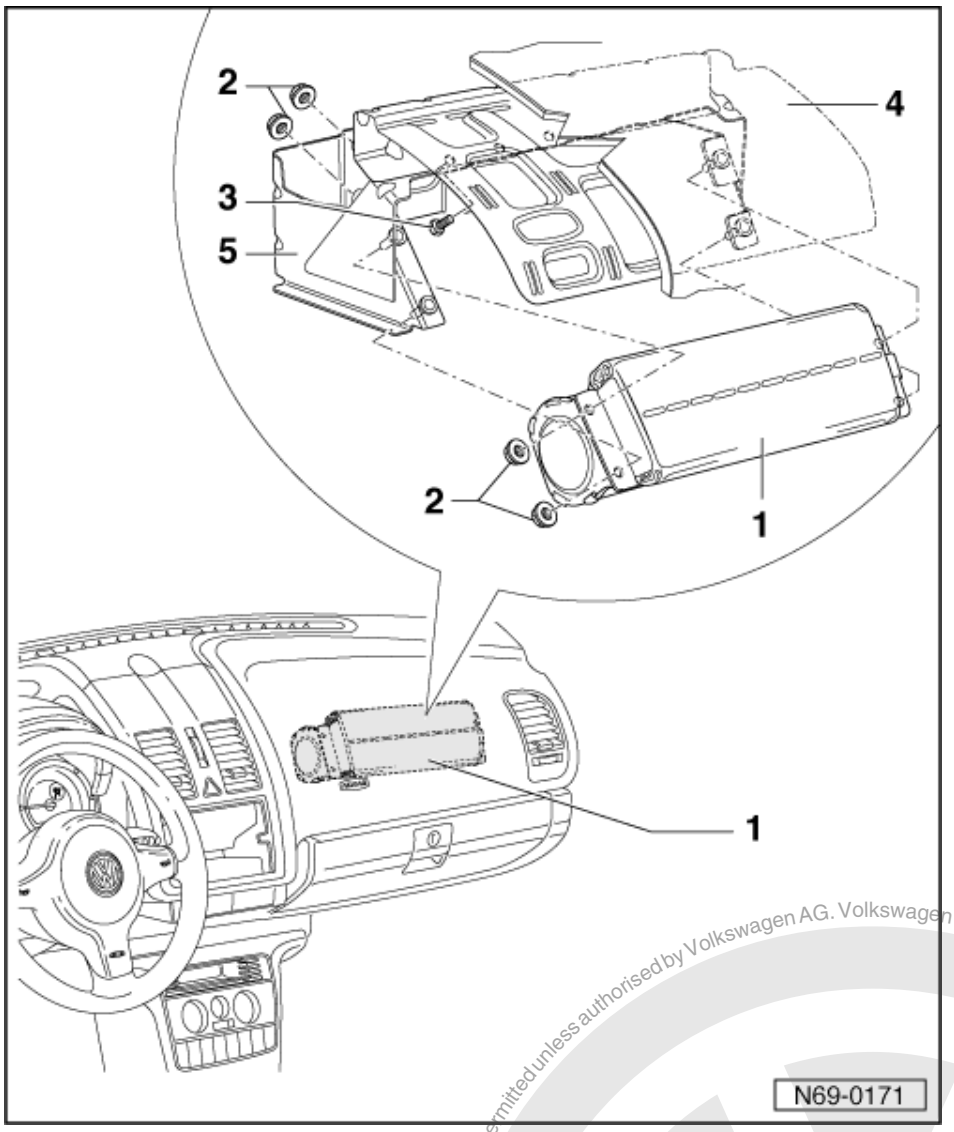

Removing

Warning!
Disconnect battery earth strap before working on electrical system.

Warning!
Technicians must electrostatically discharge themselves by touching an earthed metal part, like e.g. water pipes, heating pipes or a metal frame.

Notes:

- Before disconnecting the battery see the note concerning the coding in the instruction manual for the radio.
- After reconnecting the battery, ensure vehicle equipment (radio, clock, electric windows) are checked as per Workshop manual/Owner's manual.

Protected by copyright. Copying for private or commercial purposes, in part or in whole, is not permitted unless authorised by Volkswagen AG. Volkswagen AG does not guarantee or accept any liability with respect to the correctness of information in this document. Copyright by Volkswagen AG.
satelettronica

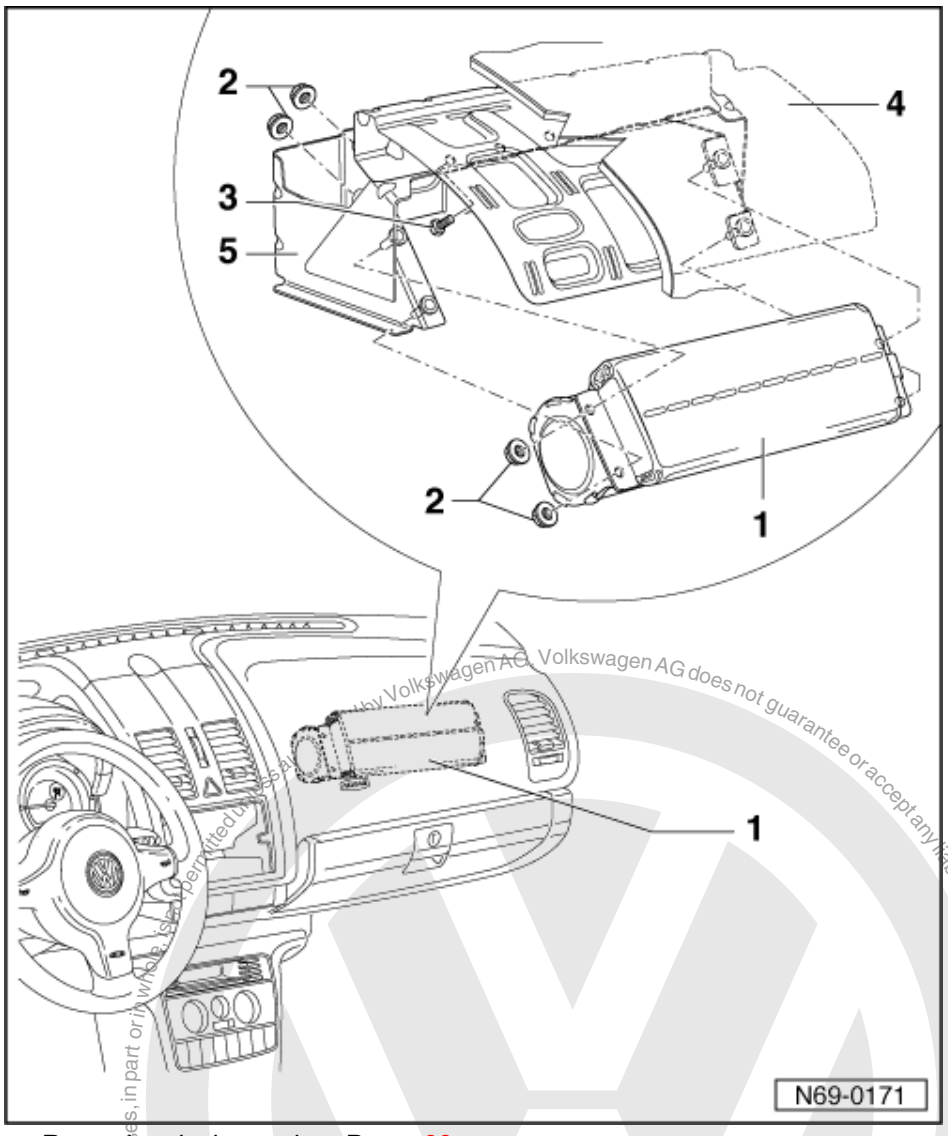

- Removing dash panel => Page 88 .
- Separate airbag unit connection.
- Remove hexagon nuts - 2 - and swing airbag unit out of mounting frame - 5 -.

Installing

- Install airbag unit and dash panel.
- Switch off all electrical consumers.
- Switch on ignition.

Warning! When connecting the battery earth strap ensure no person is in the vehicle.

- Connect battery earth strap.

Protected by copyright. Copyright by Volkswagen AG. Volkswagen AG does not guarantee or accept any liability with respect to the correctness of information in this document. Copying for private or commercial purposes, in part or in whole, is not permitted unless authorised by Volkswagen AG.
satelettronica

3.15 - Removing and installing airbag control unit (J 234)

Note:

Disconnect battery earth strap before removing the control unit.

- Remove centre console =>Page 9 .
- Remove footwell vent

=> Heating, air conditioning system; Repair group 80; Servicing heating. Servicing heating.

- If necessary make a cut in the carpeting and soundproofing mats in the area of the control unit bracket.

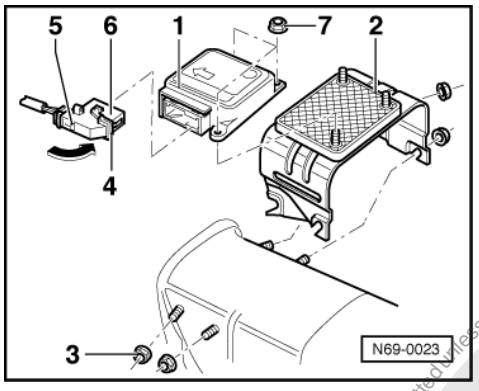

- -> Press locking tab -5-, swing bar -4- -arrow- and pull connector -6- out from control unit -1-.
- Unscrew nuts -3- and pull control unit -1- with bracket -2- off the studs.
  Tightening torque: 20 Nm.
- Unscrew nuts -7- and take control unit off bracket.
  Tightening torque: 9 Nm.

Install in reverse order.

Protected by copyright. Copying for private or commercial purposes, in part or in whole, is not permitted unless authorised by Volkswagen AG. Volkswagen AG does not guarantee or accept any liability with respect to the correctness of information in this document. Copyright by Volkswagen AG.
satelettronica

3.16 - Removing and installing driver's/front passenger's side airbag

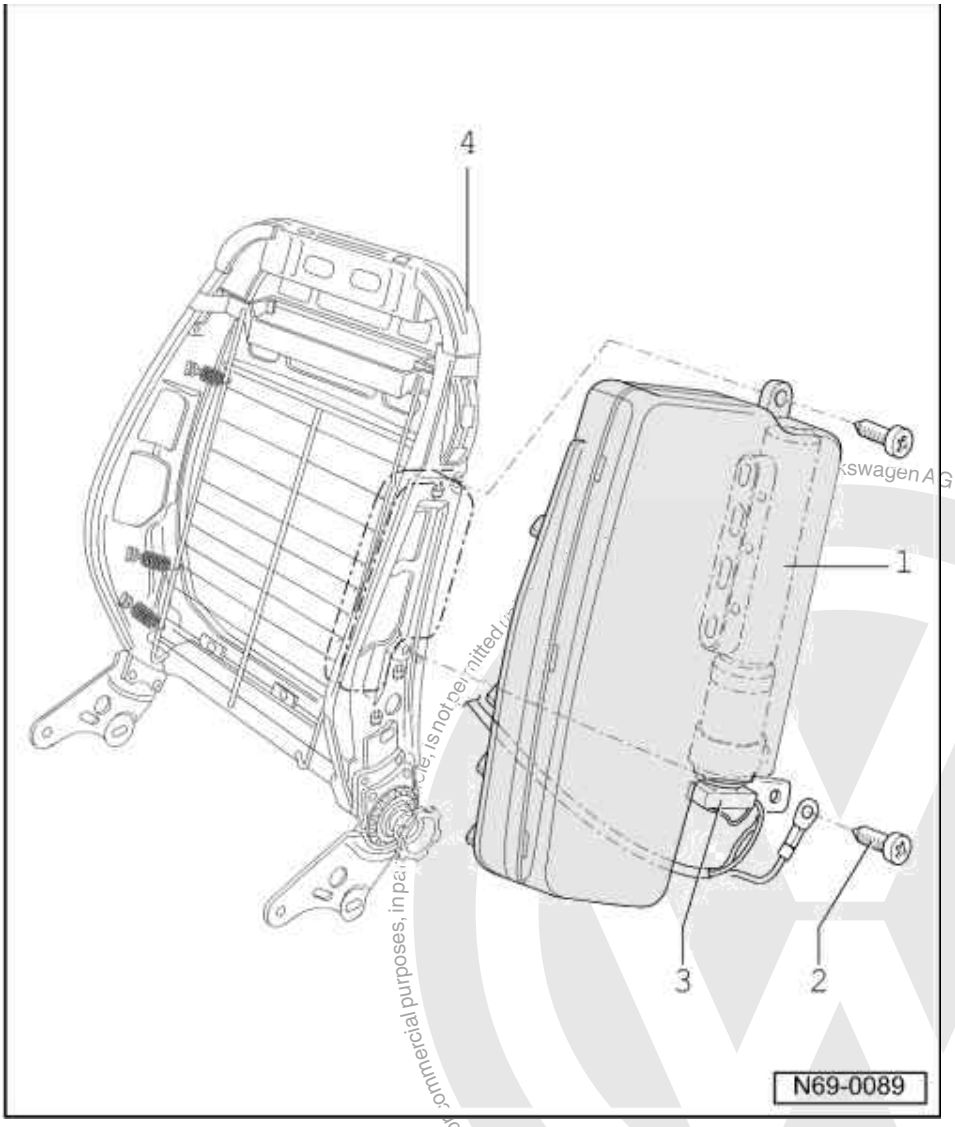

1 Side airbag, driver's/front passenger's

2 Bolt
- 7 Nm

3 Connector

4 Backrest frame

Notes:

- Before disconnecting the battery see the note concerning the coding in the instruction manual for the radio.
- After reconnecting the battery, ensure vehicle equipment (radio, clock, electric windows) are checked as per Workshop manual/Owner's manual.

Protected by copyright. Copying for private or commercial purposes, in part or in whole, is not permitted unless authorised by Volkswagen AG. Volkswagen AG does not guarantee or accept any liability with respect to the correctness of information in this document. Copyright by Volkswagen AG.
satelettronica

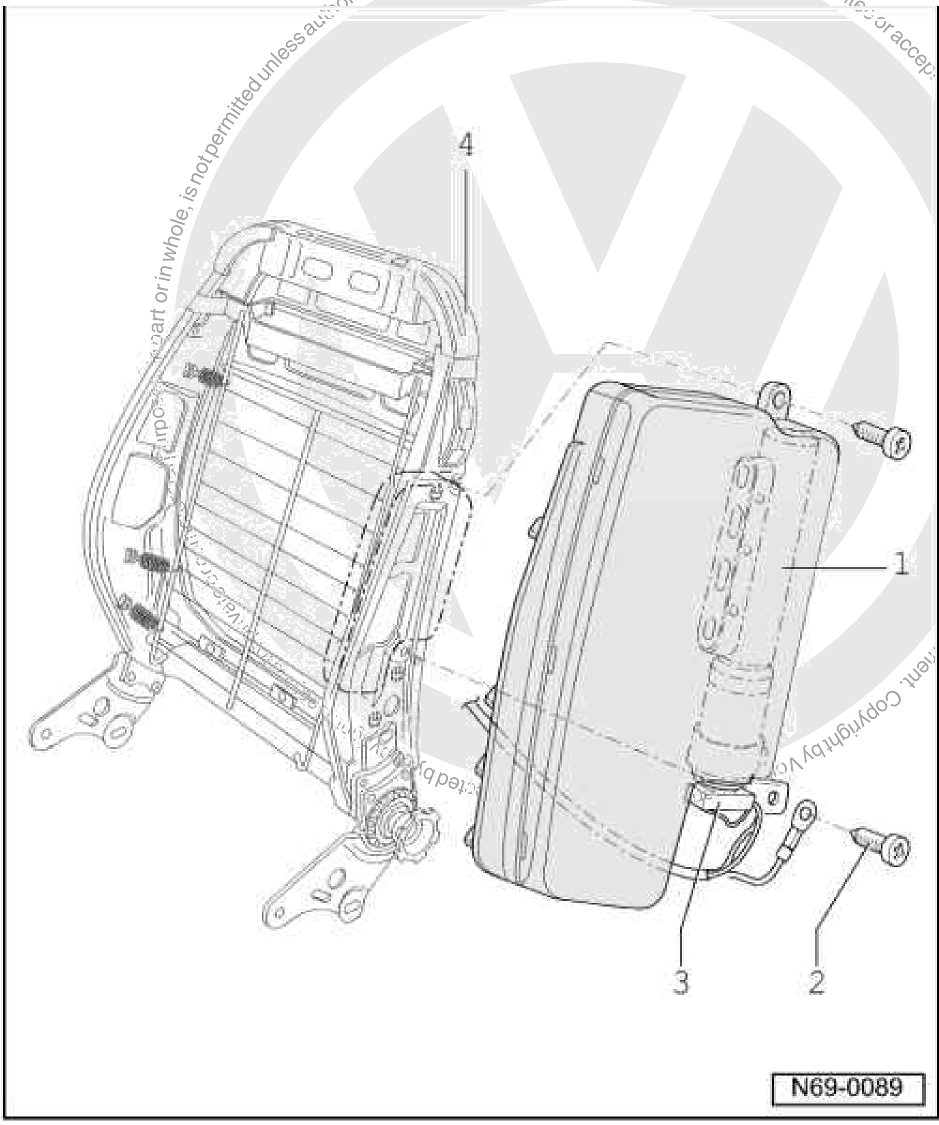

> Warning!
> Disconnect battery earth strap before working on electrical system.

> Warning!
> Technicians must electrostatically discharge themselves by touching an earthed metal part, like e.g. water pipes, heating pipes or a metal frame.

- Remove driver's or front passenger's seat (use airbag adapter V.A.G 5094) => Page 157 .
- Remove backrest => Page 162 and release backrest cover in area of airbag - 1 -.
- Remove bolts - 2 -.

Protected by copyright. Copying for private or commercial purposes, in part or in whole, is not permitted unless authorised by Volkswagen AG. Volkswagen AG does not guarantee or accept any liability with respect to the correctness of information in this document. Copyright by Volkswagen AG.

satelettronica

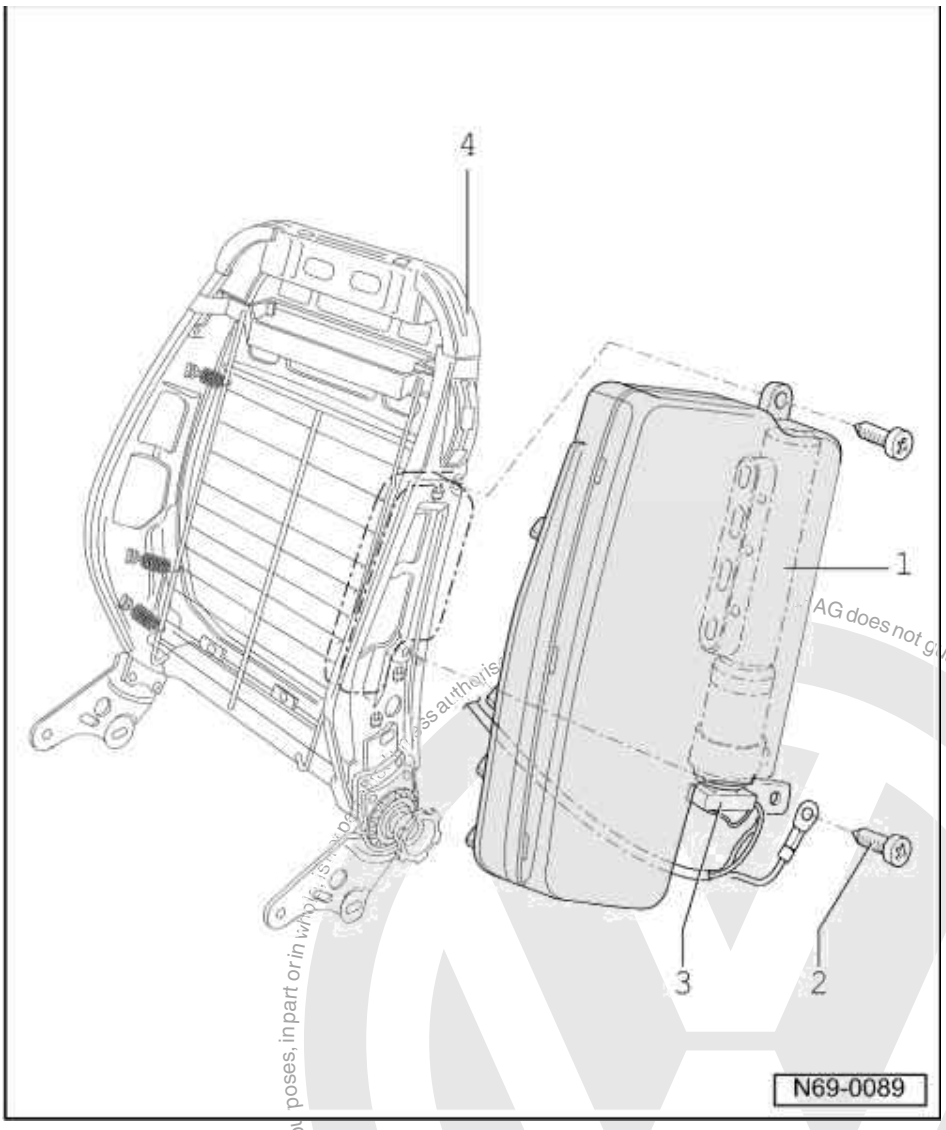

- Pull connector - 3 - off airbag unit - 1 -.
- Pull airbag unit - 1 - off backrest frame - 4 -.

Installation note:

- Switch on ignition.
- Close doors.

Warning!
When connecting the battery earth strap ensure no person is in the vehicle.

- Connect battery earth strap.

Protected by copyright. Copying for private or commercial purposes, in part or in whole, is not permitted unless authorised by Volkswagen AG. Copyright by Volkswagen AG. AG does not guarantee or accept any liability with respect to the correctness of information in this document.
satelettronica

3.17 - Removing and installing sensor for driver's/front passenger's side airbag

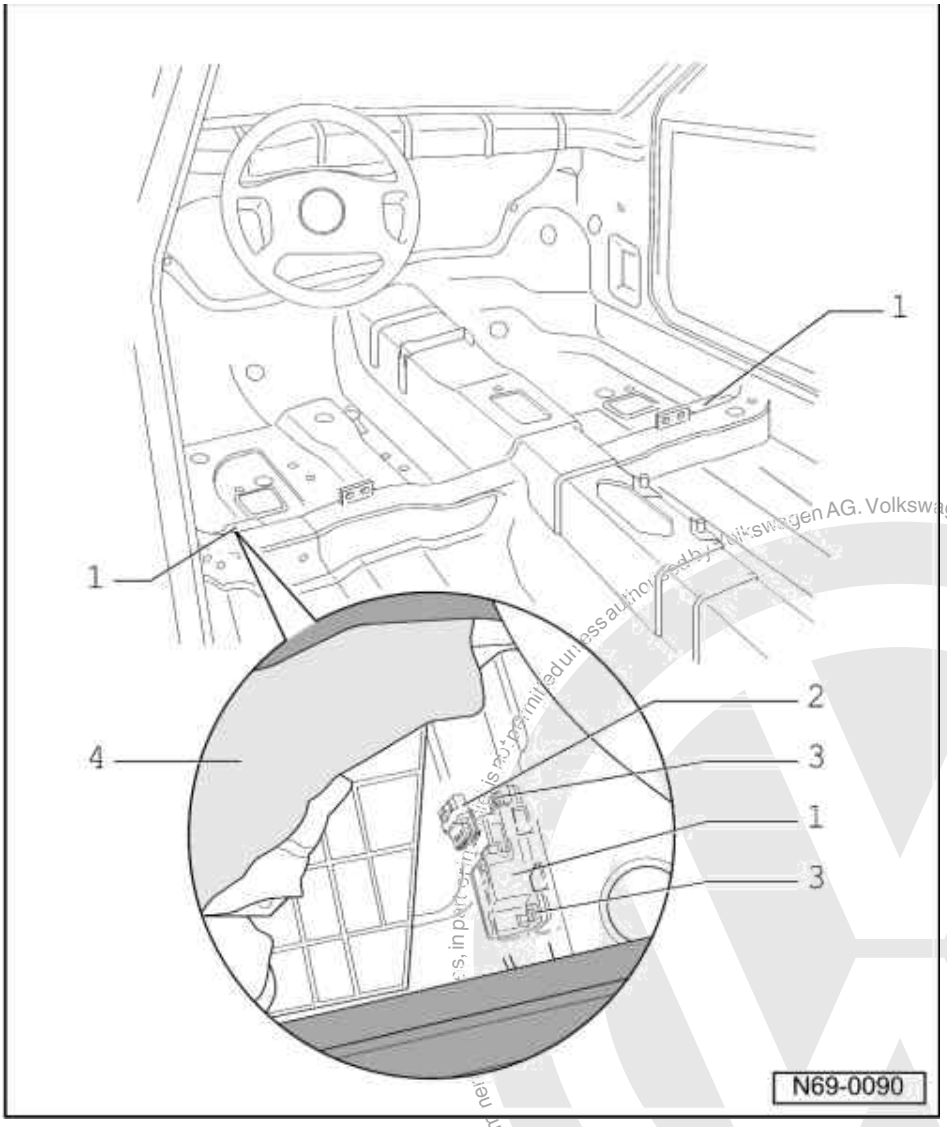

1 Sensor, driver's/front passenger's
2 Connector
3 Bolt
- 6 Nm

4 Carpet

Notes:

- Before disconnecting the battery see the note concerning the coding in the instruction manual for the radio.
- After reconnecting the battery, ensure vehicle equipment (radio, clock, electric windows) are checked as per Workshop manual/Owner's manual.

Protected by copyright. Copying for private or commercial purposes, in part or in whole, is not permitted unless authorised by Volkswagen AG. Volkswagen AG does not guarantee or accept any liability with respect to the correctness of information in this document. Copyright by Volkswagen AG.
satelettronica

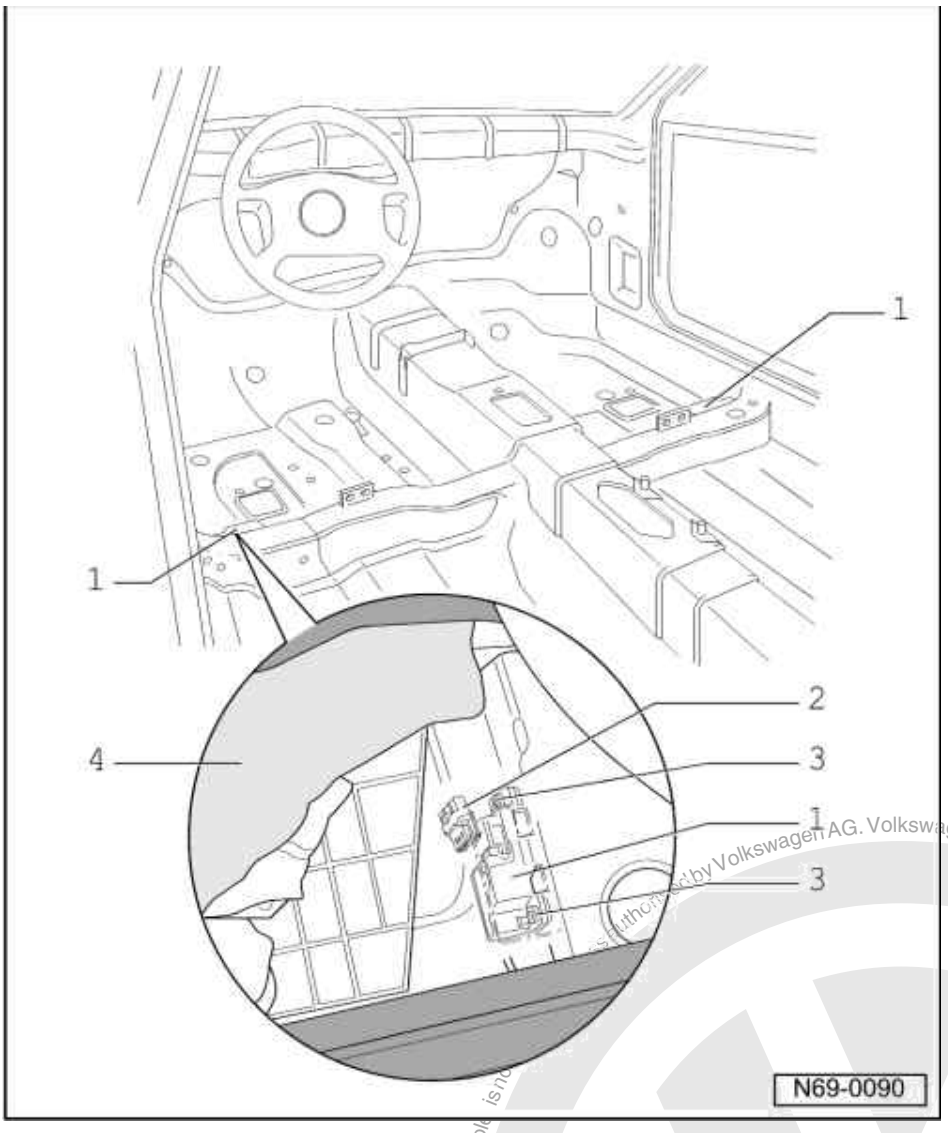

Warning!
Disconnect battery earth strap before working on electrical system.

Warning!
Technicians must electrostatically discharge themselves by touching an earthed metal part, like e.g. water pipes, heating pipes or a metal frame.

- Remove driver's or front passenger's seat (use airbag adapter V.A.G 5094) => Page 157 .
- Release carpet - 4 - and insulation mats in area of sensor.
- Disconnect connector - 2 - and remove screws - 3 -.

satelettronica
Protected by copyright. Copying for private or commercial purposes, in part or in whole, is not permitted unless authorised by Volkswagen AG. Volkswagen AG does not guarantee or accept any liability with respect to the correctness of information in this document. Copyright by Volkswagen AG.

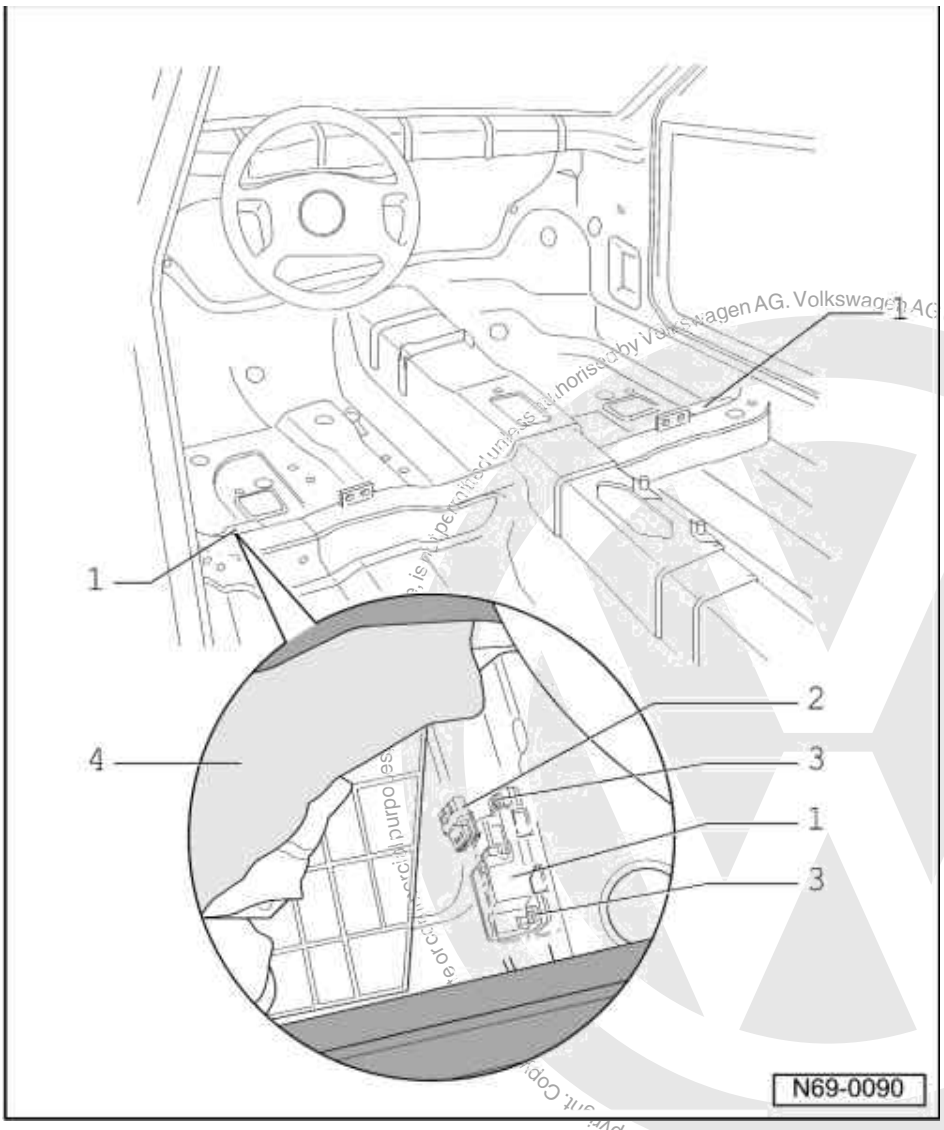

Protected by copyright. Copyright by Volkswagen AG.
Volkswagen AG does not guarantee or accept any liability with respect to the correctness of information in this document.
satelettronica

Installation note:

- Switch on ignition.
- Close doors.

Warning! When connecting the battery earth strap ensure no person is in the vehicle.

- Connect battery earth strap.

70 - Trim/Insulation

1 - Dash panel

1.1 - Dash panel

1.2 - Tools

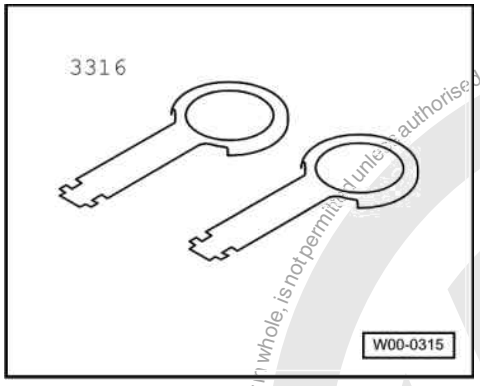

Special tools, workshop equipment, testers, measuring instruments and auxiliary items required

- 3316 Release tool

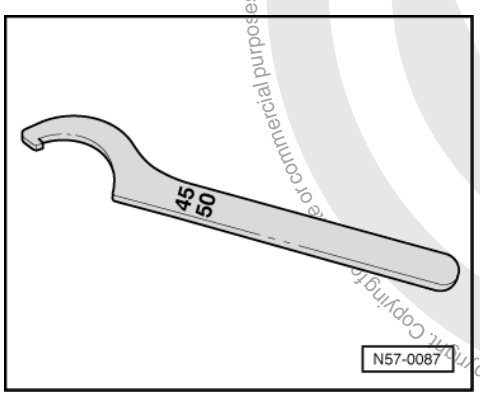

- Commercially available 'C' spanner with lug DIN 1810/A, size 45/50 mm

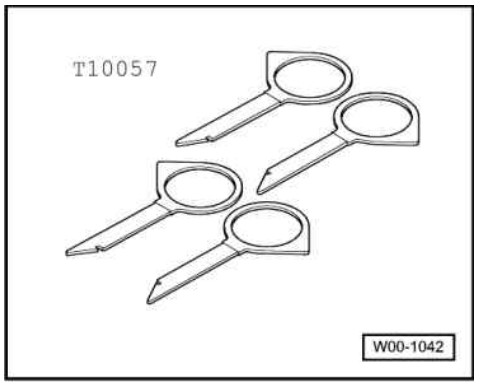

Protected by copyright. Copying for commercial purposes, part or in whole, is not permitted unless authorised by Volkswagen AG. Volkswagen AG does not guarantee or accept any liability with respect to the correctness of information in this document. Copyright by Volkswagen AG.
satelettronica

- T10057 Release tool

1.3 - Removing dash panel (Caddy, Polo Classic > 09.99, Polo Estate > 09.99)

- Disconnect battery earth strap at battery.
- Remove centre console =>Page 7 .
- Remove driver's side stowage compartment =>Page 15 .
- Remove driver's airbag unit =>Page 57 .

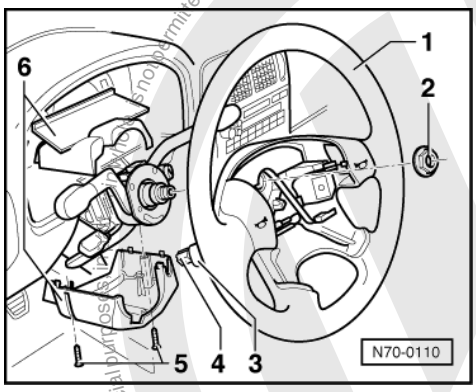

- -> Unscrew cross-head screws -5-.
- Remove steering column switch trim -6-.
- Remove hexagon nut -2- (50 Nm).
- Steering wheel -1- in centre position (wheels straight-ahead).
- Pull steering wheel -1- off steering column.
- Pull foam tube -3- off connection -4- and separate connectors.

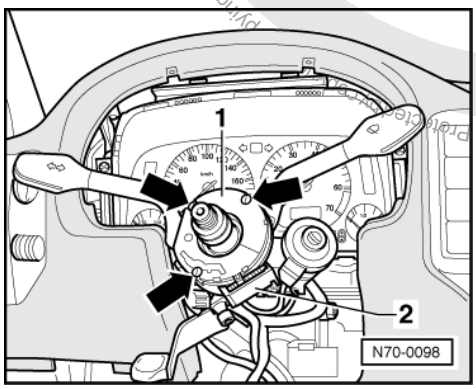

- -> Pull connector off steering column switch -2-.
- Unscrew cross-head screws -arrows- and remove steering column switch -1-.

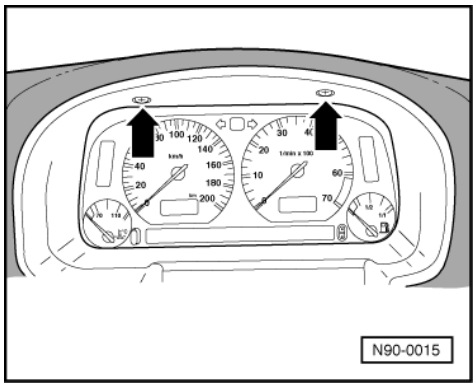

- -> Remove cross-head screws -arrows-.

satelettronica

- Pull out trim for dash panel insert.

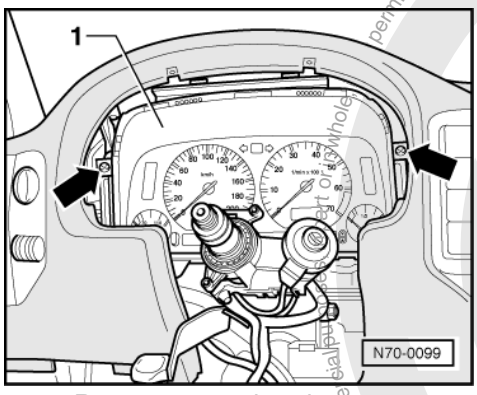

- -> Remove cross-head screws -arrows-.
- Take dash panel insert -1- out of mounting.
- Pull connectors off.

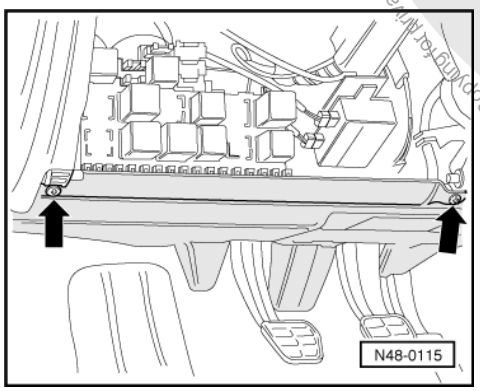

- -> Remove cross-head screws -arrows-.
- Take out driver's side footwell cover.

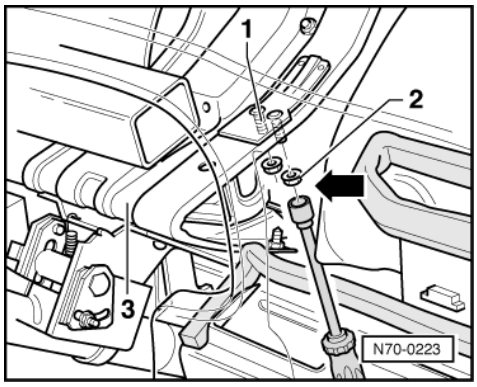

- -> Remove hexagon nuts -2-.

Notes:

- The hexagon nuts -2- are located on the inside of the steering column bracket. They are difficult to see and can only be reached from below through the opening between the steering column bracket -3- and the bulkhead with a thin 10 mm socket of relevant length.
- When installing, the hexagon nuts -2- can be screwed onto the studs -1- from the inside of the vehicle through the steering column bracket -3- side opening -arrow-.

Protected by copyright. Copyright by Volkswagen AG. Volkswagen AG does not guarantee or accept any liability with respect to the correctness of information in this document. Copyright by Volkswagen AG. Reproduction or publication in whole or in part is not permitted unless authorised by Volkswagen AG.
satelettronica

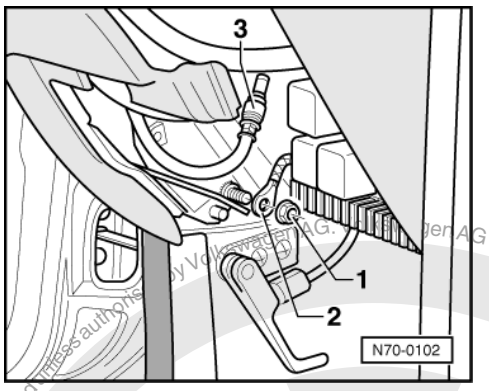

- -> Remove hexagon nut -1-.
  Remove earth wire -2-.
- Separate aerial connection -3-.
- Pull dash panel wiring loom single and multi-pin connectors off relay plate.
- Pull connectors off immobilizer control unit and heater unit blower.

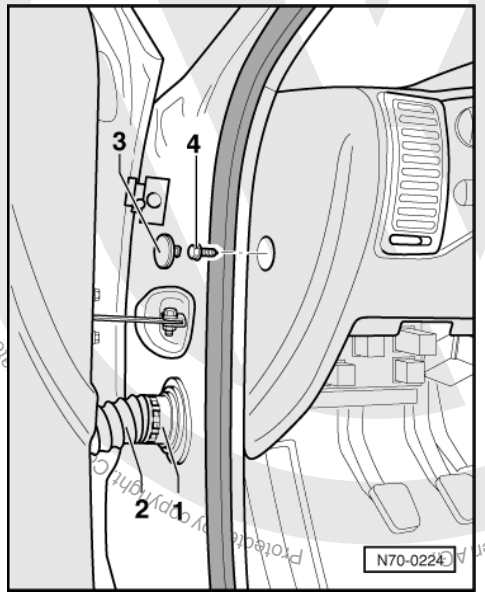

- -> Disconnect multi-pin connector -1- and central locking hose/pipe (older versions only) on A pillar. For vehicles with no central locking system, pull bellows -2- off A pillar and disconnect connector found inside.
- Lever off cap -3-.
- Remove hexagon head bolt -4-.

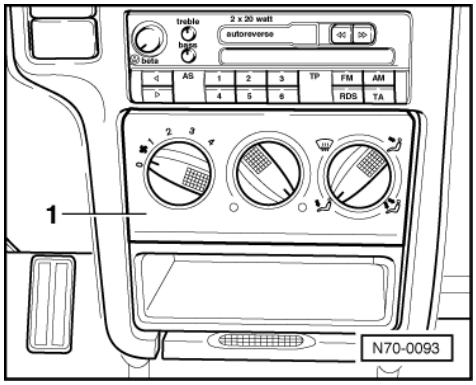

- -> Unclip trim -1- .

satelettronica

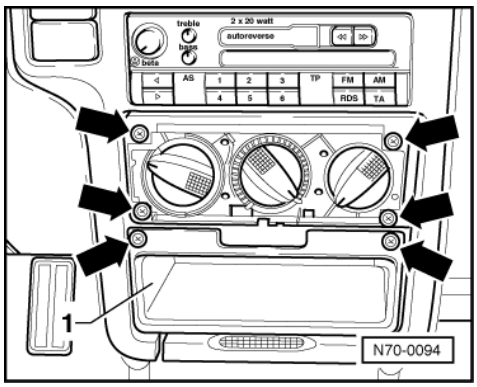

- -> Remove cross-head screws -arrows-.
- Depending on equipment level, pull shelf -1- out or remove trim with switches (for seat heating and electrical window lifters) and separate connections.

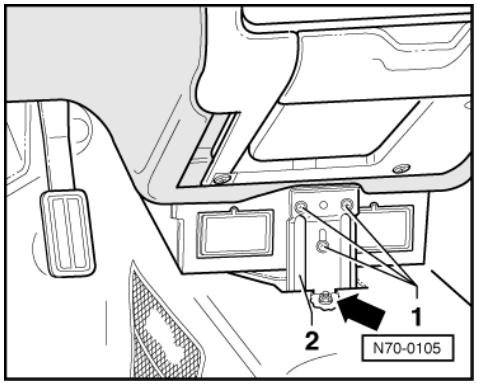

- -> Unscrew cross-head screws -1-.
- Remove hexagon head nut -arrow-.
- Take out support -2-.

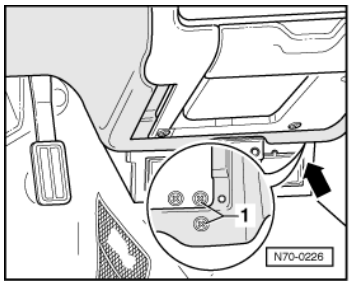

- -> Unscrew cross-head screws -1-.
- Remove footwell air outlet:

=> Heating, Air conditioning system; Repair Group 80; servicing heating system. servicing heating system.

- Pull off multi-pin connection for airbag control unit (J 234) =>Page 75 .

Protected by copyright. Copying for private or commercial purposes, in part or in whole, is not permitted unless authorised by Volkswagen AG. Volkswagen AG does not guarantee or accept any liability with respect to the correctness of information in this document. Copyright by Volkswagen AG
satelettronica

Protected by copyright. Copyright by Volkswagen AG. Volkswagen AG does not guarantee or accept any liability with respect to the correctness of information in this document. Copyright by Volkswagen AG. Commercial purposes, in part or in whole, is not permitted unless authorised by Volkswagen AG.

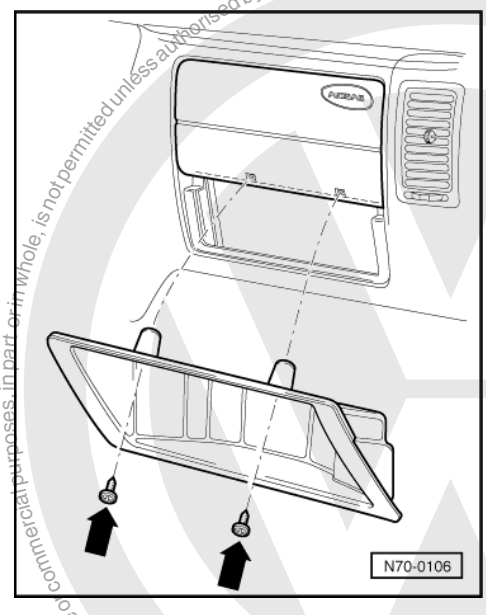

Older vehicles

- -> Remove cross-head screws -arrows-.
- Pull passenger's side stowage compartment out of dash panel.

Newer vehicles

- Remove glove compartment => Page 20 .
- Remove passenger's side airbag unit =>Page 72 .

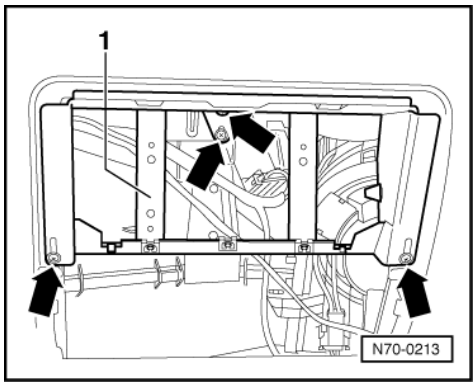

- -> Remove cross-head screws -arrows-.
- Pull front passenger's airbag bracket -1- out of dash panel.

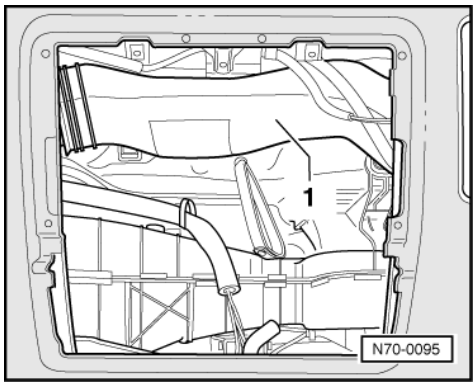

- -> Remove passenger's side air duct -1-.

satelettronica

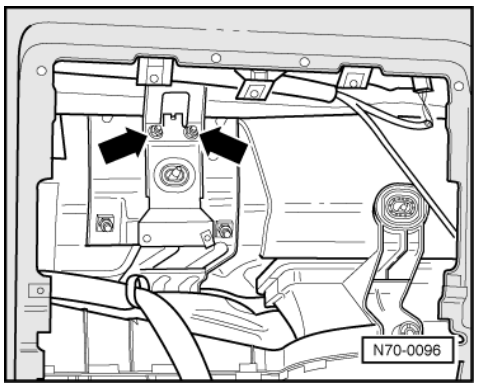

- -> Remove hexagon nuts -arrows-.

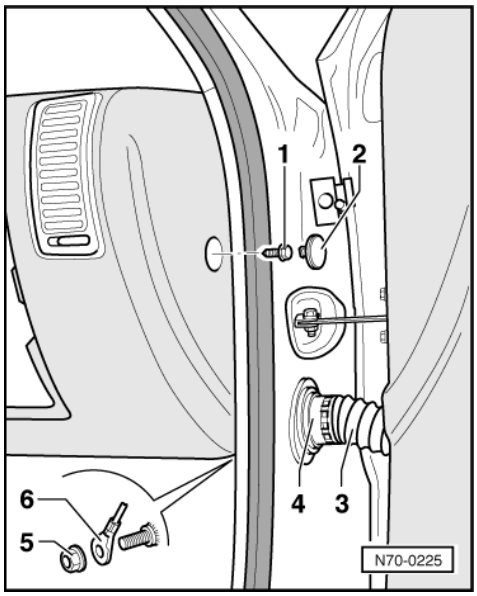

- -> Remove hexagon nut -5- and earth wire -6- if part of original equipment.
- Disconnect multi-pin connector -4- and central locking hose/pipe (older versions only) on A pillar. For vehicles with no central locking system, pull bellows -3- off A pillar and disconnect connector found inside.
- Lever out cap -2-
- Remove hexagon bolt -1-.
- Take out dash panel.

1.4 - Removing and installing dash panel (Polo Classic 10.99 >, Polo Estate 10.99 >)

Warning!
Disconnect battery earth strap before working on the electrical system.

Removing

Notes:

- Before disconnecting the battery see the note concerning the coding in the instruction manual for the radio.
- After connecting battery, check vehicle equipment (radio, clock, electric windows) as per Workshop manual and/or Owner's manual.
- The removal and installation procedures may have to be modified slightly depending on equipment variants.

- Remove steering wheel =>Page 64 .

satelettronica
Protected by copyright. Copying for private or commercial purposes, in part or in whole, is not permitted unless authorised by Volkswagen AG. Volkswagen AG does not guarantee or accept any liability with respect to the correctness of information in this document. Copyright by Volkswagen AG.

- Removing steering column switch.

=> Electrical system; Repair Group 94; Steering column switch Steering column switch

- Remove driver's stowage compartment =>Page 17 .
- Remove centre console =>Page 9 .
- Remove glove compartment =>Page 20 .

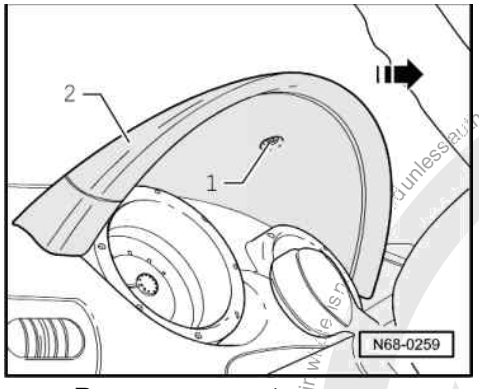

- -> Remove screw -1-.
- Unclip upper part of instrument hood -2- in direction of arrow.

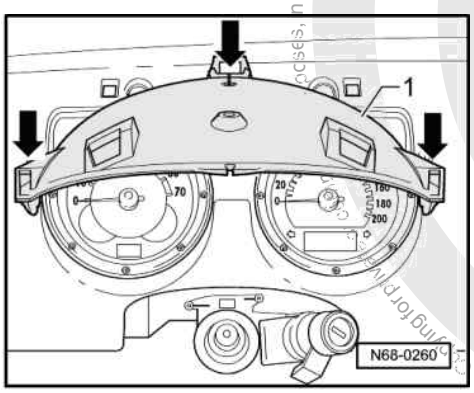

- -> Remove three screws -arrows-.
- Remove lower part of instrument hood -1-.

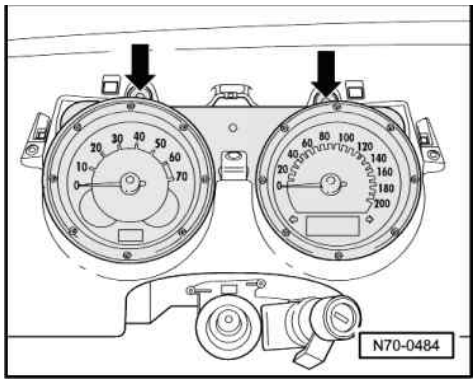

- -> Remove Qty. 2 screws -arrows-.
- Take out combi instrument.
- Pull connector off.

Protected by copyright. Copying for private or commercial purposes, in part or in whole is not permitted unless authorised by Volkswagen AG. Volkswagen AG does not guarantee or accept any liability with respect to the correctness of information in this document. Copyright by Volkswagen AG.
satelettronica

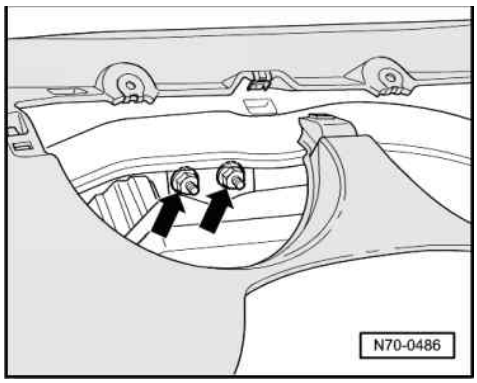

- -> Remove hexagon nuts -arrows-.

Note:

- The two hexagon nuts are visible first after removing the combi instrument.

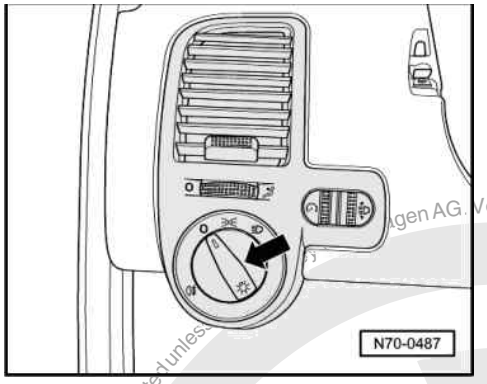

- -> Press in lighting switch -arrow-, turn clockwise and pull out.
- Pull connector off.

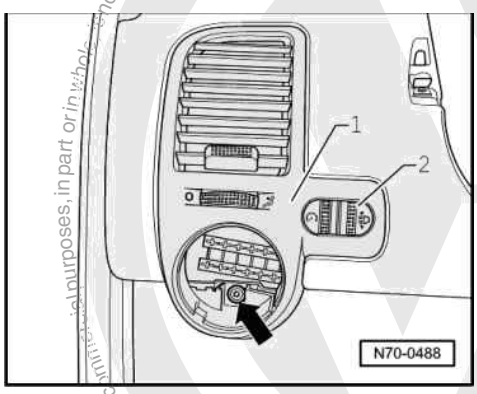

- -> Remove bolt -arrow-.
- Pull out vent on driver's side -1-.
- Pull off connector on headlight range control -2-.

Protected by copyright. Copying for private or commercial purposes, in part or in whole, is not permitted unless authorised by Volkswagen AG. Volkswagen AG does not guarantee or accept any liability with respect to the correctness of information in this document. Copyright by Volkswagen AG.
satelettronica

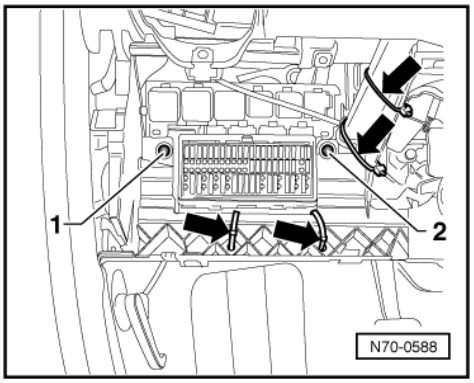

- -> Remove screws -1- and -2-.
- Cut through cable tie -arrows-.

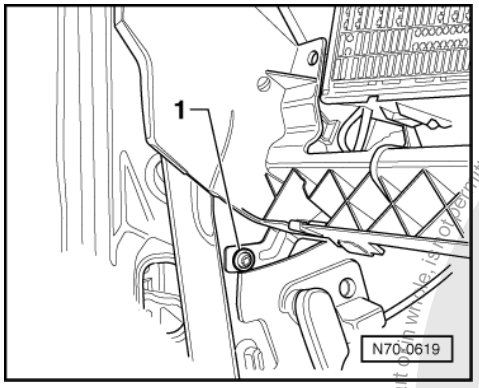

- -> Remove bolt -1- on left and right-hand sides.

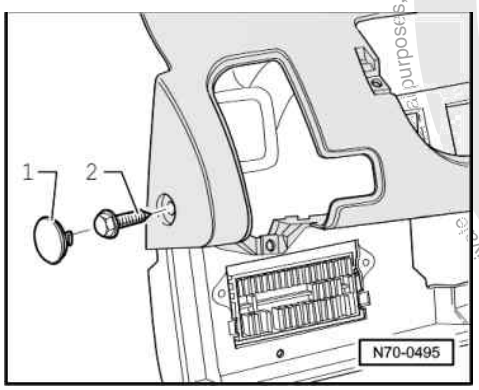

- -> Unclip cover cap -1- on left and right.
- Remove bolt -2- on left and right-hand sides.

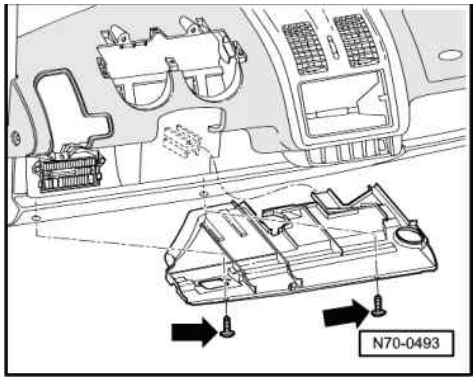

- -> Remove Qty. 2 screws -arrows-.

Protected by copyright. Copying for private or commercial purposes, in part or in whole, is not permitted unless authorised by Volkswagen AG. Volkswagen AG does not guarantee or accept any liability with respect to the correctness of information in this document. Copyright by Volkswagen AG.
satelettronica

- Take out driver's side footwell cover.

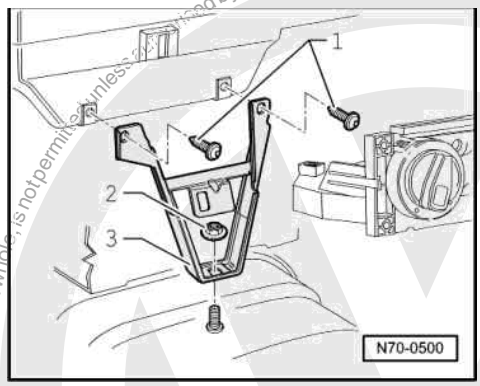

- -> Remove Qty. 2 screws -1-.
- Remove hexagon nut -2-.
- Take out support -3-.

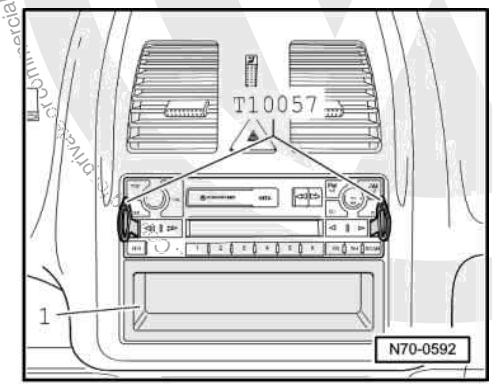

- -> Slide radio release tool T10057 into the release slots until they engage.
- Pull radio out of the dash panel using the grip rings of the release tools and disconnect connectors.

Notes:

- When doing this the radio release tool T10057 must not be pushed to the side or tilted.
- To remove the release tools from the radio the locating lugs on the side of the radio must be pressed inwards.

- Pull out stowage compartment -1-.

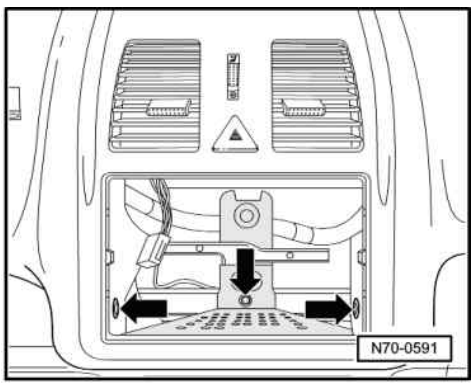

- -> Remove Qty. 3 screws -arrows-.
- Take out centre vent.
- Pull connector off hazard warning light switch.

Volkswagen AG does not guarantee or accept any liability with respect to the correctness of information in this document. Copyright by Volkswagen AG.
satelettronica

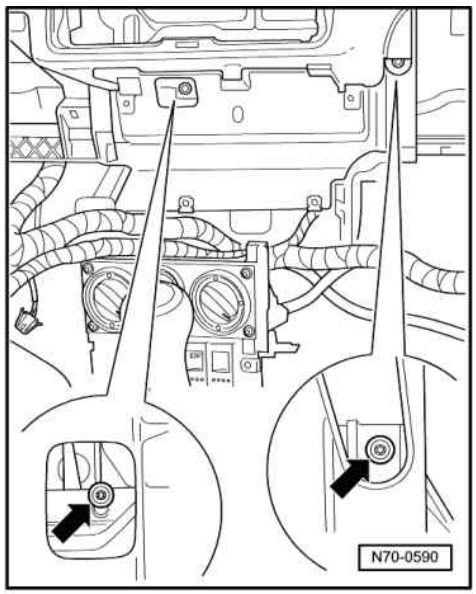

- -> Remove Qty. 2 screws -arrows-.

Note:

- The screws are visible through the openings, they are set back approx. 2 cm.

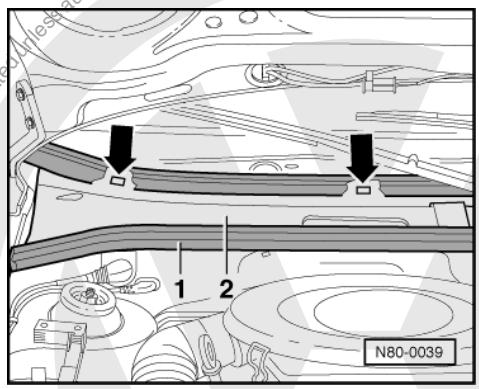

- -> Pull off rubber seal -1- upwards as far as centre of vehicle.
- Unclip plenum chamber cover -2- (arrows) and pull out.

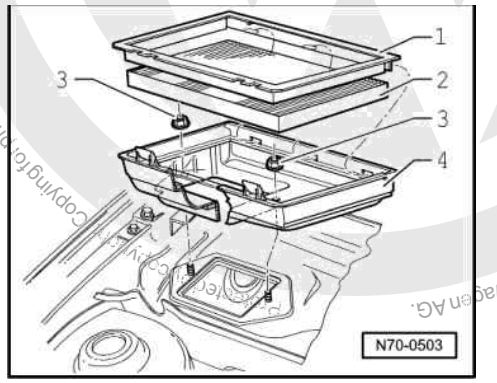

- -> Unclip pollen filter frame -1-.
- Take out pollen filter -2-.
- Remove hexagon nuts -3-.
- Take out pollen filter housing -4-.

Copyright by Volkswagen AG. Volkswagen AG does not guarantee or accept any liability with respect to the correctness of information in this document. Copyright by Volkswagen AG.
Copying for private or commercial purposes, in part or in whole, is not permitted unless authorised by Volkswagen AG.
satelettronica

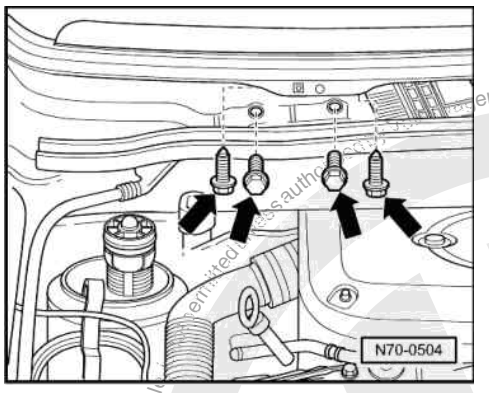

- -> Remove Qty. 4 bolts -arrows-.

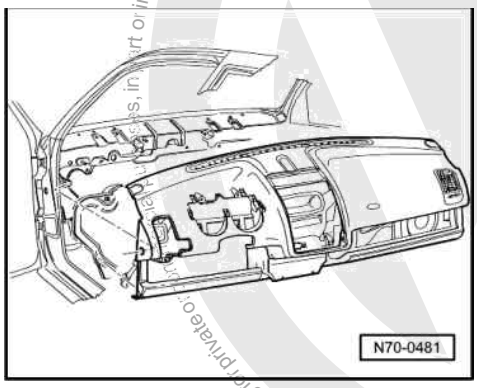

- -> Pull dash panel out slightly.

Note:

- The wiring harness is secured to the dash panel by clips and cable ties. The wiring harness remains in the vehicle when removing the dash panel.

- Release clips, cable ties and connectors depending upon the vehicle equipment level.
- Lift out dash panel.

Installing

Install in reverse order.

Note:

- If the airbag fault warning lamp (K 75) signals a fault after assembling then the fault memory must be erased and interrogated again with fault reader V.A.G 1551

=> Body self-diagnosis; Repair group 01; Self-diagnosis for airbag systems. Self-diagnosis for airbag systems.

satelettronica

2 - Door trim

2.1 - Door trim

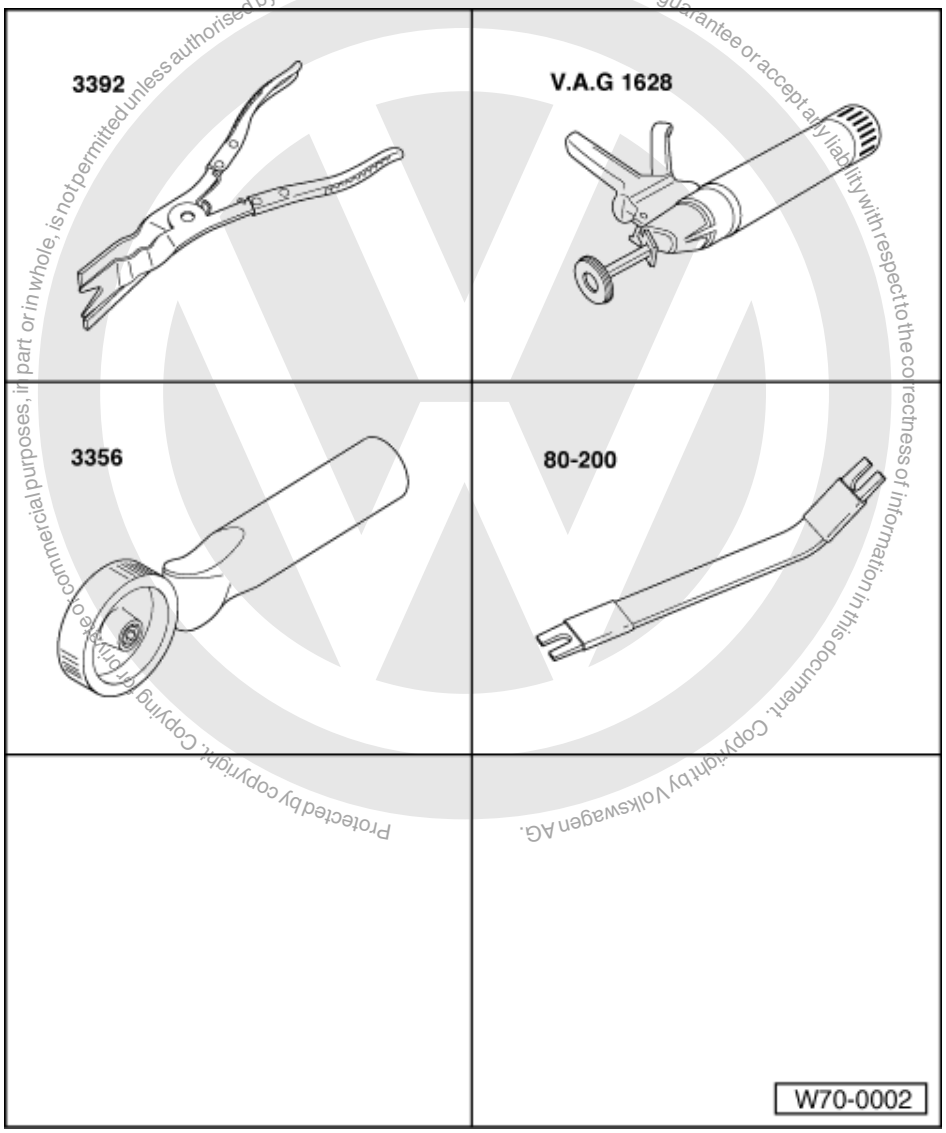

Protected by copyright. Copying for private or commercial purposes, in part or in whole, is not permitted unless authorised by Volkswagen AG. Volkswagen AG does not guarantee or accept any liability with respect to the correctness of information in this document. Copyright by Volkswagen AG.

2.2 - Tools

Special tools, workshop equipment, test and measuring appliances and aux. items required

- 3392 Dismantling pliers
- V.A.G 1628 Cartridge gun
- 3356 Press roller
- 80-200 Removal lever

satelettronica

2.3 - Front door trim - assembly overview

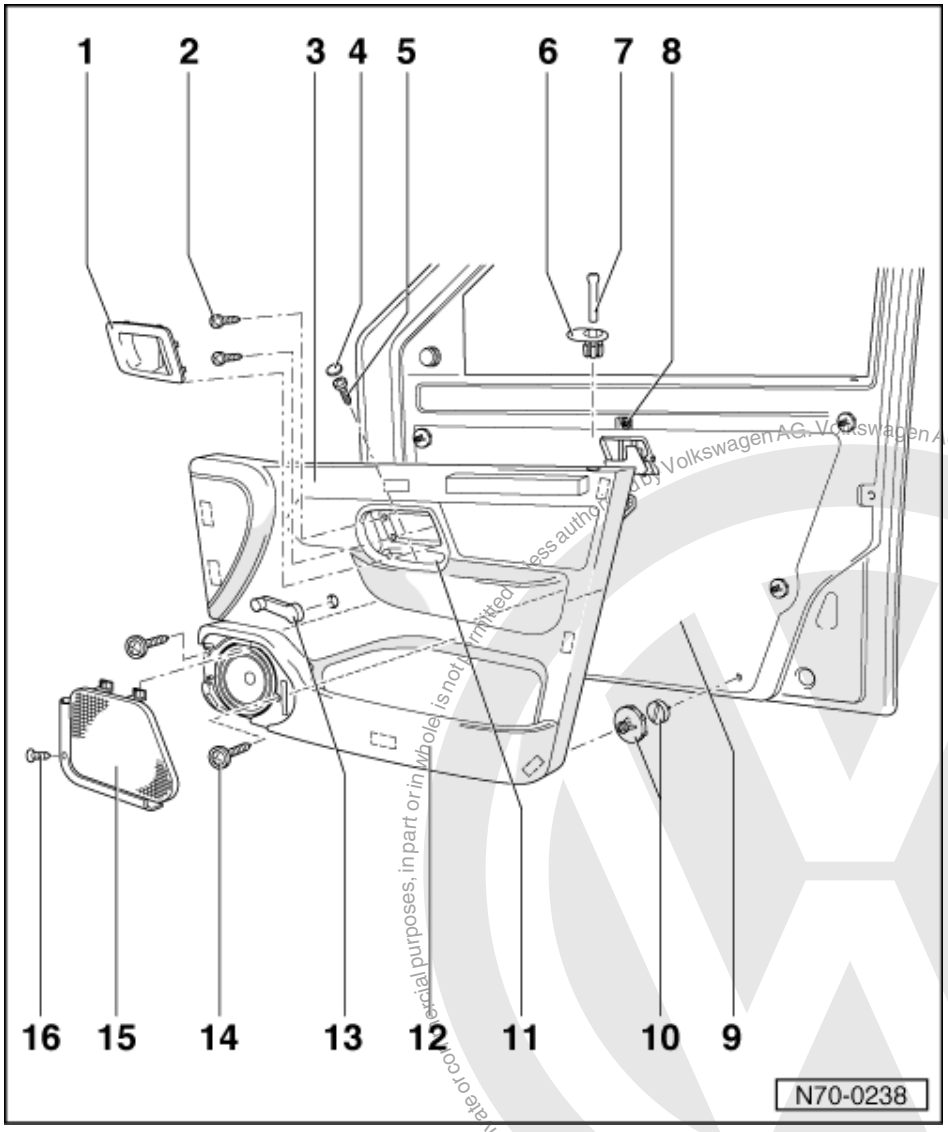

1 Trim panel
- Clipped into door pull

2 Oval head screw
- 4 Nm

3 Trim
- Removing and installing => Page 99

4 Cover cap (only on older vehicles)

5 Cross-head screw (only on older vehicles)

6 Trim plate

Protected by copyright. Copying for private or commercial purposes, in part or in whole, is not permitted unless authorised by Volkswagen AG. Volkswagen AG does not guarantee or accept any liability with respect to the correctness of information in this document. Copyright by Volkswagen AG.
satelettronica

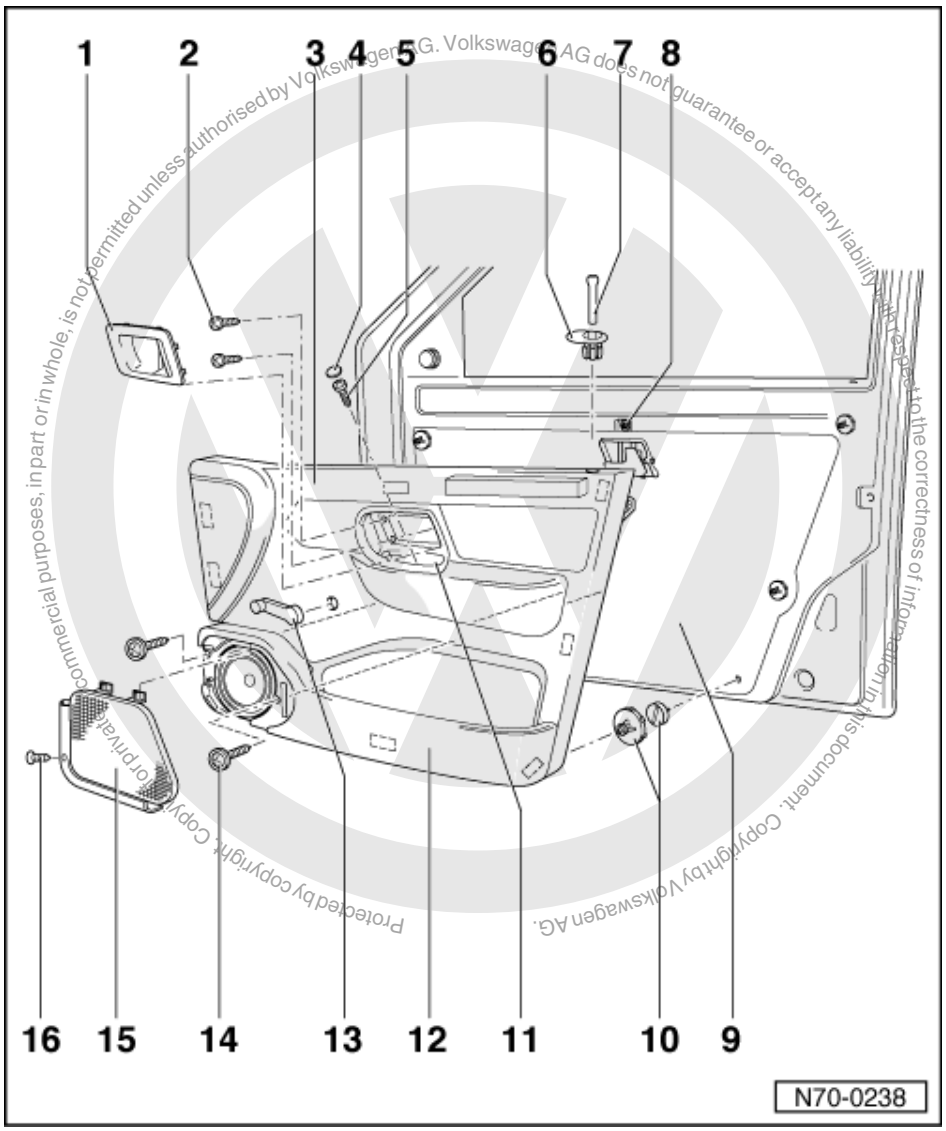

7 Locking knob
- Unscrew from locking rod

8 Spreader clip
- Removing:
- Press out spreader pin

9 Insulation sheeting
- Removing and installing => Page 108

10 Trim clip
- Two-piece
- Qty. 7
- Remove lower part using pliers 3392

11 Door pull
- Removal is only possible after first removing trim panel

satelettronica

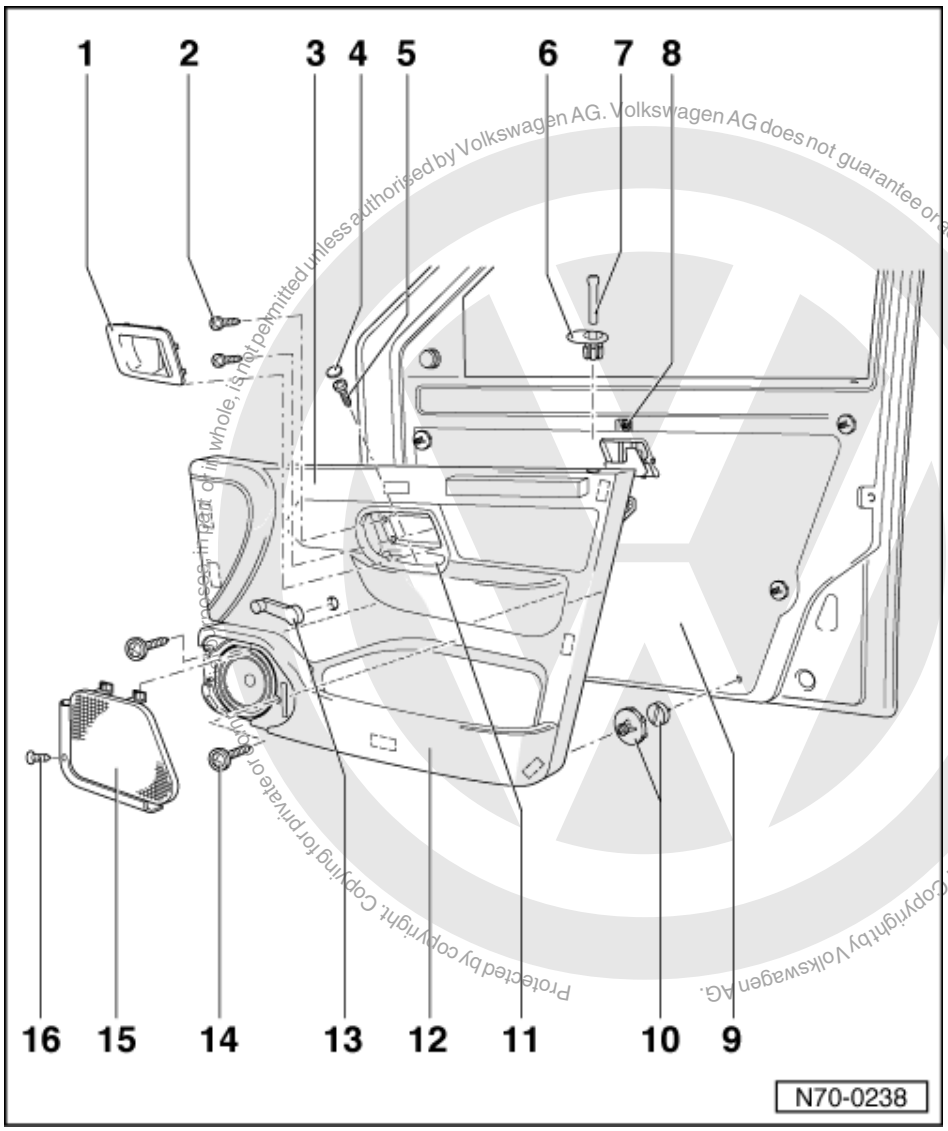

Protected by copyright. Copying for private or commercial purposes, in part or in whole, is not permitted unless authorised by Volkswagen AG. Volkswagen AG does not guarantee or accept any liability with respect to the correctness of information in this document. Copyright by Volkswagen AG.

satelettronica

12 Stowage compartment
- Removal is only possible after first removing trim panel

13 Window crank
- Removing => Page 100

14 Cross-head screw

15 Speaker cover
- Clipped into door stowage compartment and secured with cross-head screw - 5 -

16 Cross-head screw

2.4 - Removing and installing front door trim

Removing

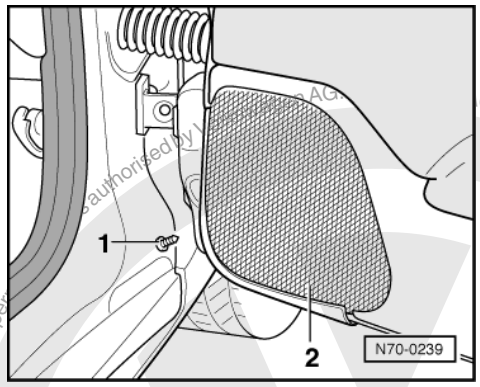

- -> Unscrew cross-head screw -1- and pull off loudspeaker cover -2-.

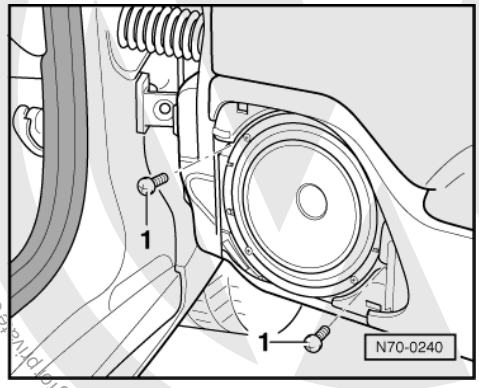

- -> Unscrew cross-head screws -1-.

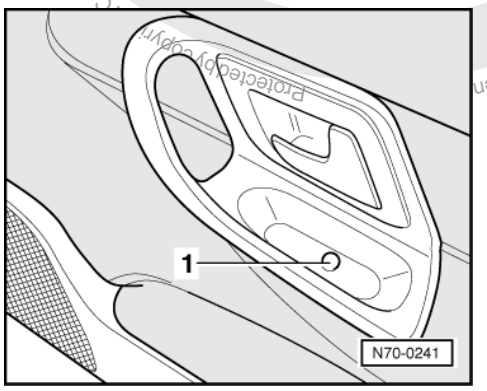

- -> Lever out cover cap -1- and unscrew cross-head screw beneath (only on older vehicles).
- On vehicles with manual mirror adjustment, pull off adjuster knob.

Copyright by Volkswagen AG. Protected by copyright. Copyright by Volkswagen AG does not guarantee or accept any liability with respect to the correctness of information in this document. Copyright by Volkswagen AG. Copyright by Volkswagen AG, authorised by Volkswagen AG, is not permitted for private or commercial purposes, in part or in whole.
satelettronica

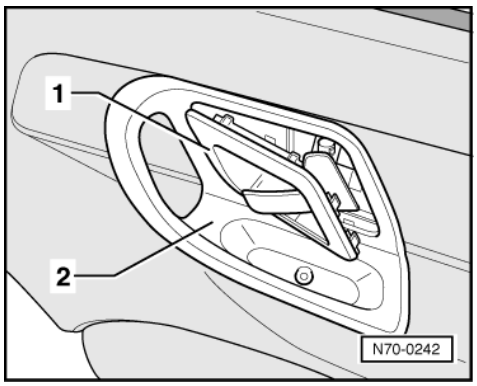

- -> Lever trim -1- out of door pull -2-.

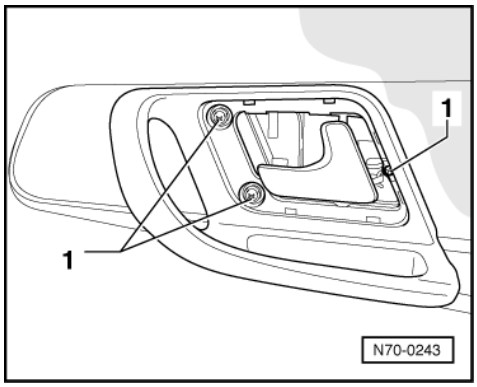

- -> Unscrew cross-head screws -1-.

Vehicles with manually operated windows

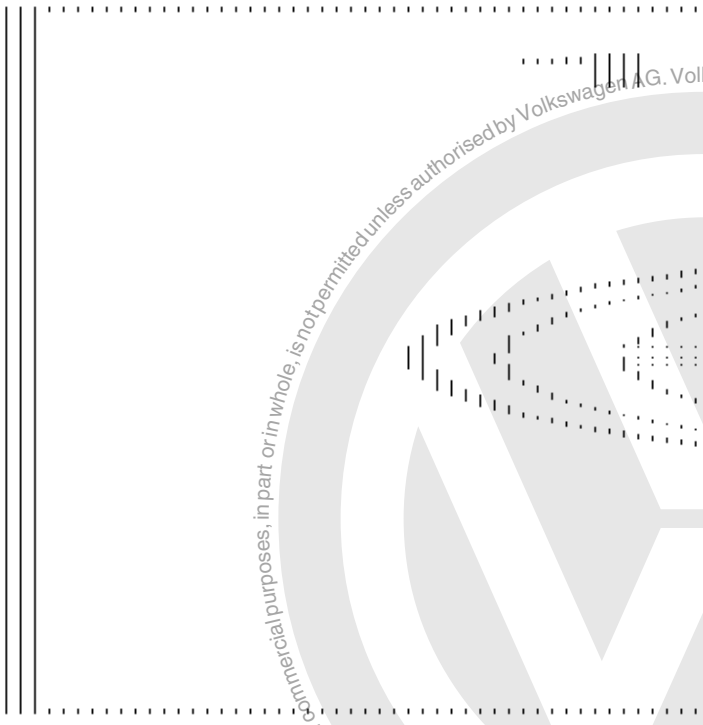

- -> Slide spacer -1- in direction of arrow (retaining clip will be unlocked) and pull window crank off shaft.

satelettronica
Protected by copyright. Copying for private or commercial purposes, in part or in whole, is not permitted unless authorised by Volkswagen AG. Volkswagen AG does not guarantee or accept any liability with respect to the correctness of information in this document. Copyright by Volkswagen AG.

Continuation of all vehicles

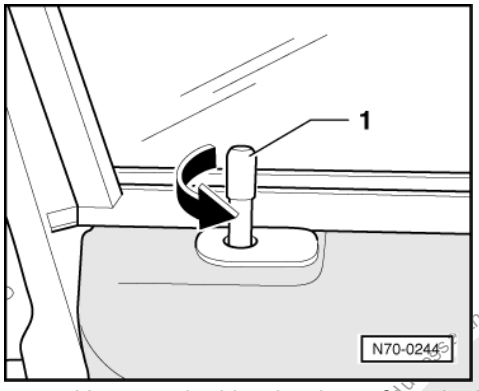

- -> Unscrew locking knob -1- from locking rod.

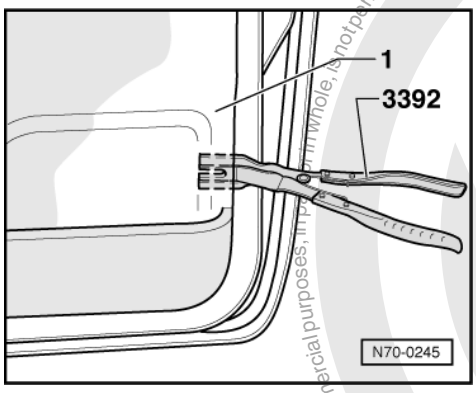

- -> Press trim -1- off door with pliers 3392, separate electrical connectors (loudspeaker, immobilizer, warning lamp) and remove trim.

Installing

Install in reverse order.

Protected by copyright. Copying for private or commercial purposes, in part or in whole, is not permitted unless authorised by Volkswagen AG. Volkswagen AG does not guarantee or accept any liability with respect to the correctness of information in this document. Copyright by Volkswagen AG.
satelettronica

2.5 - Rear door trim - Assembly overview (Caddy)

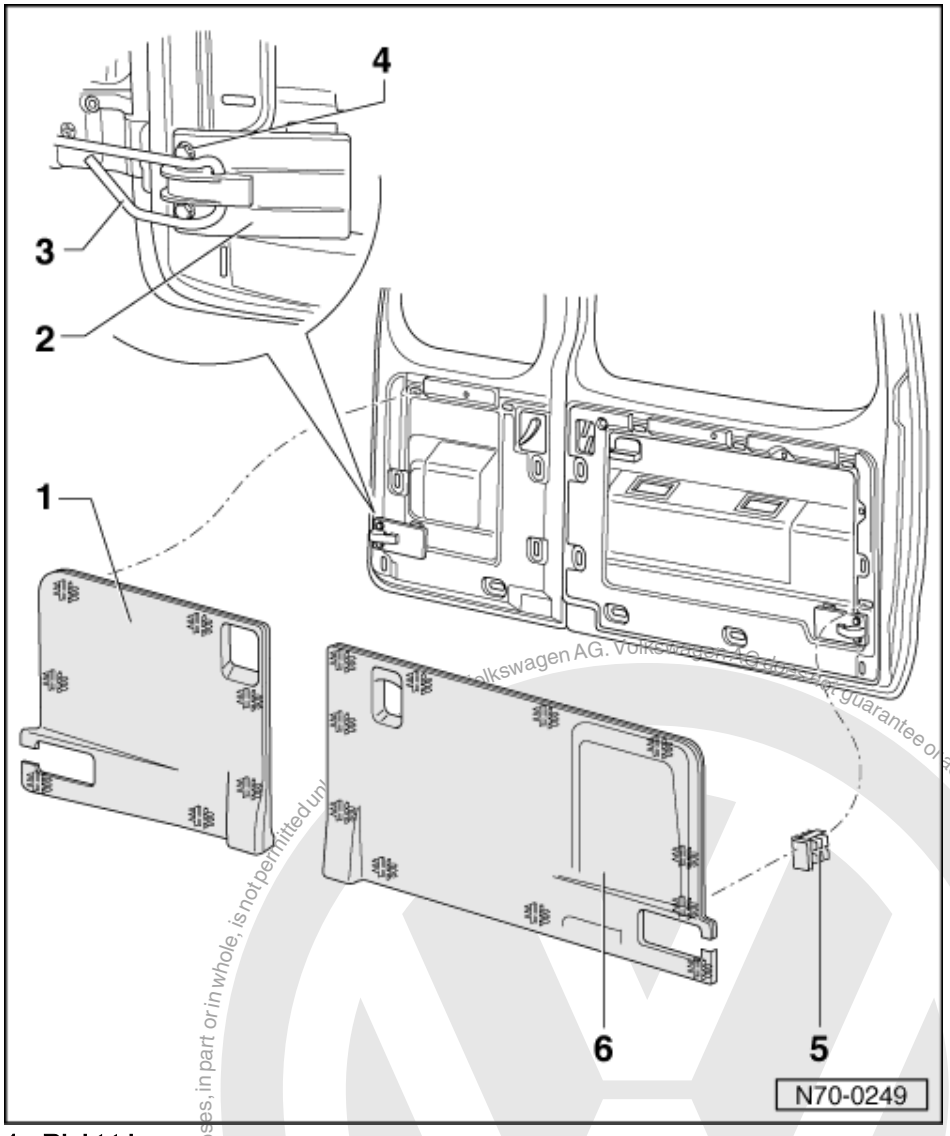

1 Right trim
- Removing:
- Pull off trim.
- Installing:
- Check seating and condition of clips - 5 - and correct or renew as necessary.

2 Door arrester retainer

3 Door arrester

4 Hexagon bolt

5 Clip
- Pushed onto trim mounting

Protected by copyright. Copying for private or commercial purposes, in part or in whole, is not permitted unless authorised by Volkswagen AG. Volkswagen AG does not guarantee or accept any liability with respect to the correctness of information in this document. Copyright by Volkswagen AG.
satelettronica

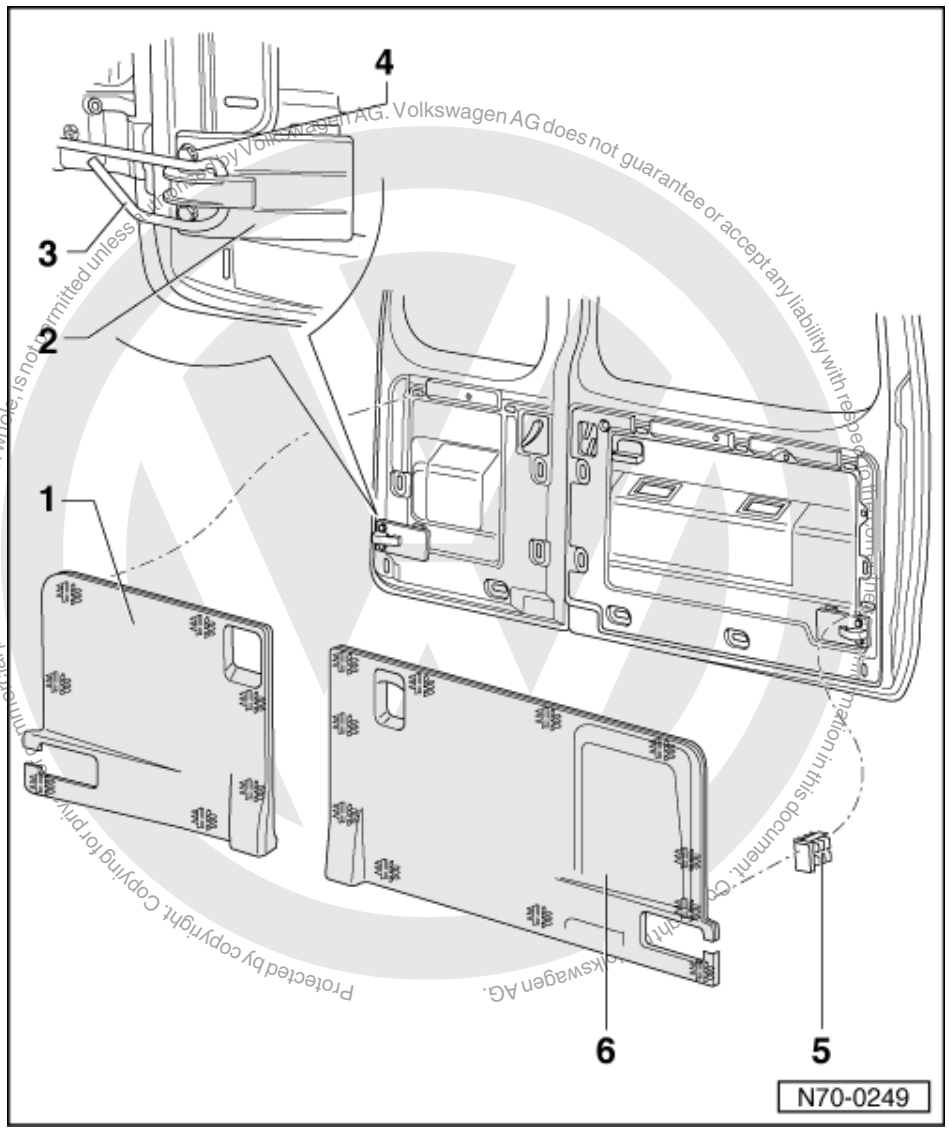

6 Left trim

- Removing:
- Pull off trim.
- Installing:
- Check seating and condition of clips - 5 - and correct or renew as necessary.

satelettronica

2.6 - Rear door trim - Assembly overview (Polo Classic, Polo Estate)

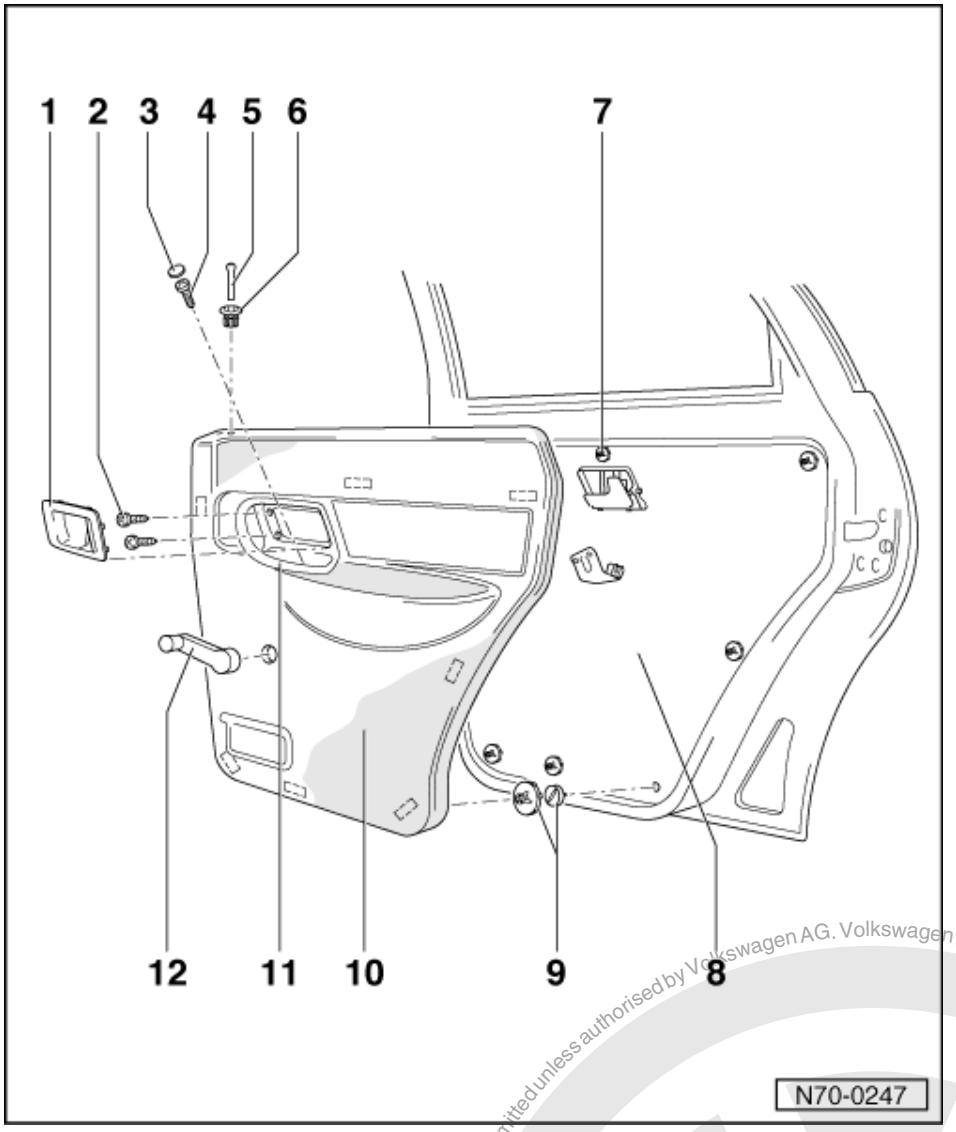

1 Trim panel
- Clipped into door pull

2 Oval head screw
- 4 Nm

3 Cover cap (only on older vehicles)

4 Cross-head screw (only on older vehicles)

5 Locking knob
- Unscrew from locking rod

6 Trim plate

7 Spreader clip
- Removing:
  - Press out spreader pin

satelettronica
Protected by copyright. Copying for private or commercial purposes, in part or in whole, is not permitted unless authorised by Volkswagen AG. Volkswagen AG does not guarantee or accept any liability with respect to the correctness of information in this document. Copyright by Volkswagen AG.

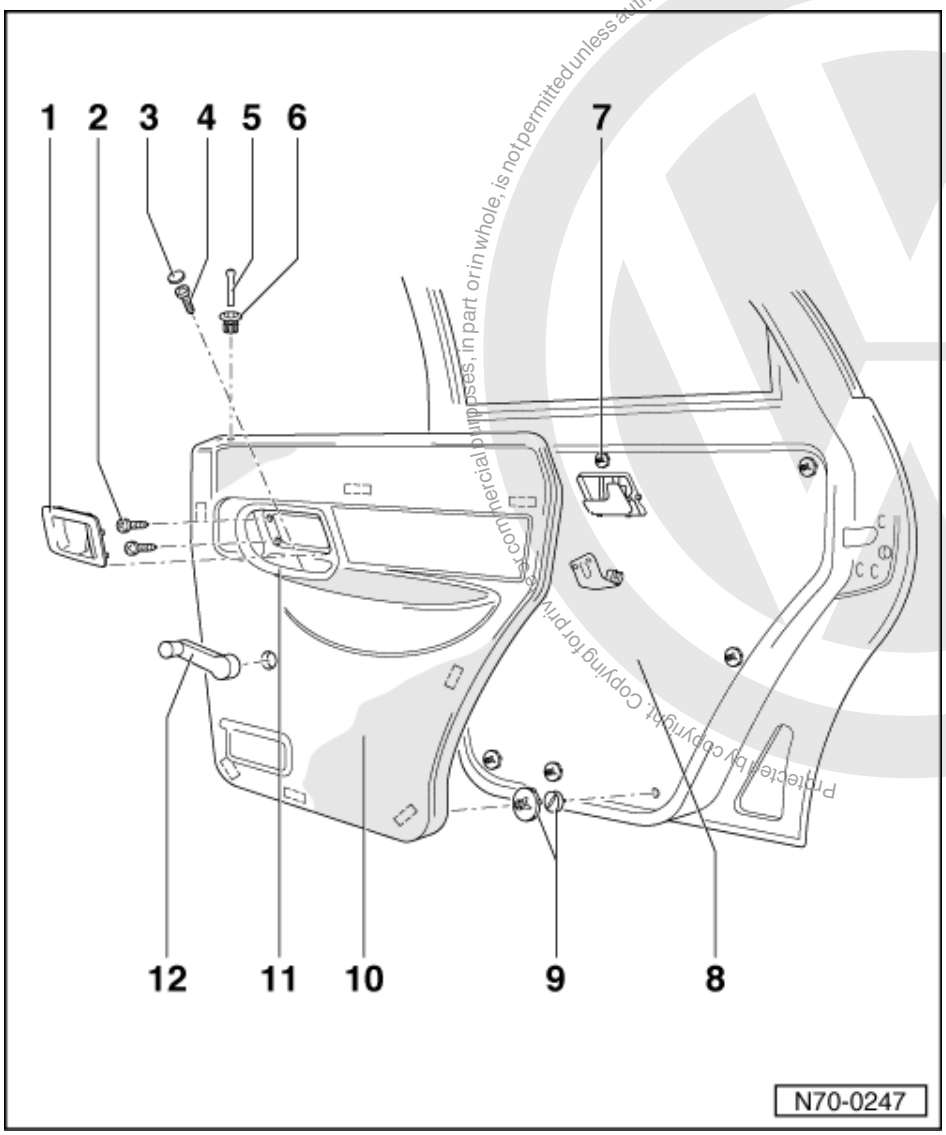

8 Insulation film
- Removing and installing => Page 108

9 Trim clip
- Two-piece
- Qty. 7
- Remove lower part using pliers 3392

10 Trim
- Removing and installing => Page 106

11 Door pull
- Removal is only possible after first removing trim panel

12 Window crank
- Removing => Page 107

Protected by copyright. Copying for private or commercial purposes, in part or in whole, is not permitted unless authorised by Volkswagen AG. Volkswagen AG does not guarantee or accept any liability with respect to the correctness of information in this document. Copyright by Volkswagen AG.
satelettronica

2.7 - Removing and installing rear door trim (Polo Classic, Polo Estate)

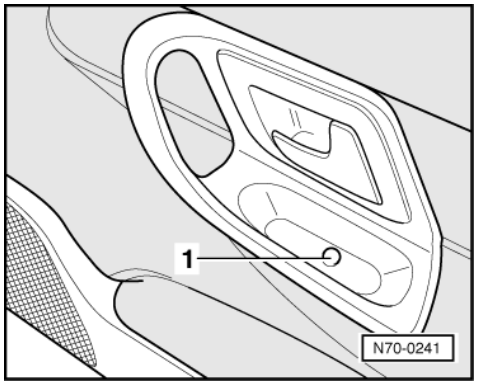

- -> Lever out cover cap -1- and unscrew cross-head screw beneath (only on older vehicles).

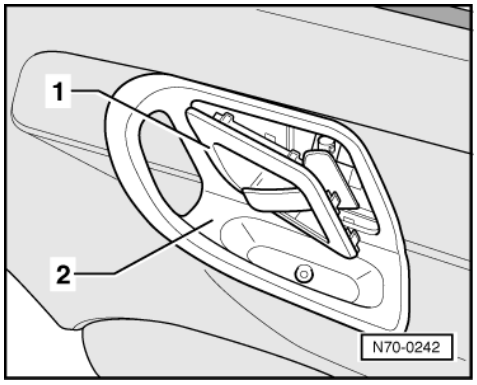

- -> Lever trim -1- out of door pull -2-.

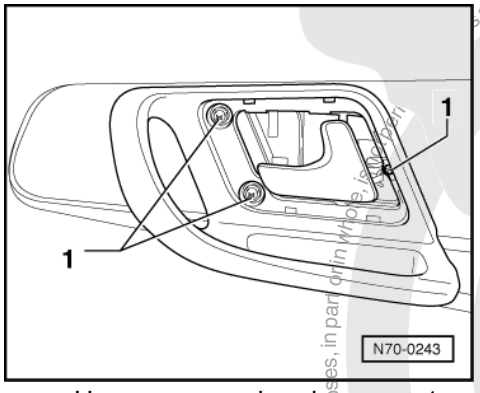

- -> Unscrew cross-head screws -1-.

Protected by copyright. Copying for private or commercial purposes, in part or in whole, is not permitted unless authorised by Volkswagen AG. Volkswagen AG does not guarantee or accept any liability with respect to the correctness of information in this document. Copyright by Volkswagen AG.
satelettronica

Protected by copyright. Copying for private or commercial purposes, in part or in whole, is not permitted unless authorised by Volkswagen AG. Volkswagen AG does not guarantee or accept any liability with respect to the correctness of information in this document. Copyright by Volkswagen AG.

Vehicles with mechanically operated windows

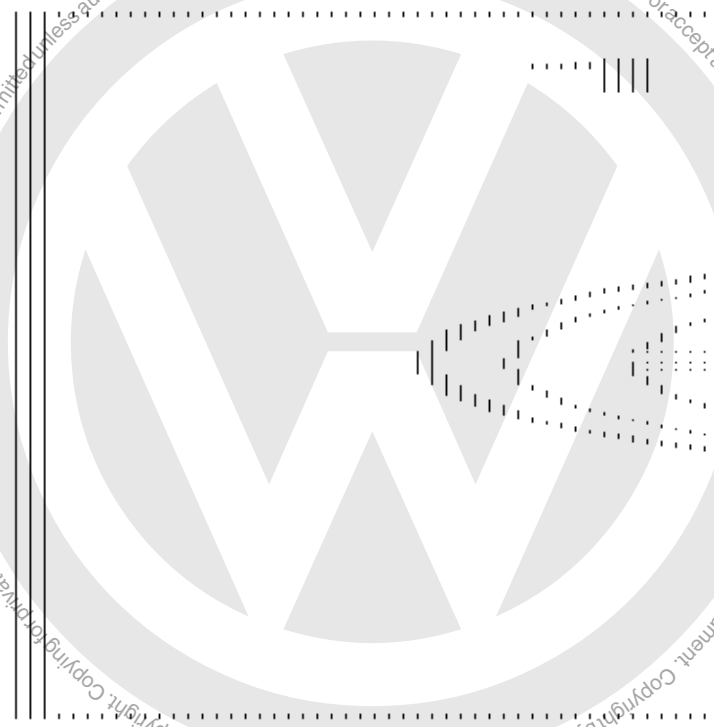

- -> Slide spacer -1- in direction of arrow (retaining clip will be unlocked) and pull window crank off shaft.

Continuation of all vehicles

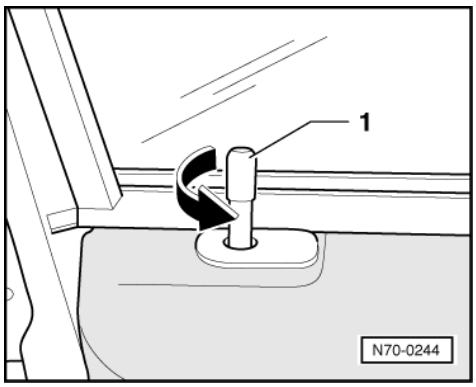

- -> Unscrew locking knob -1- from locking rod.

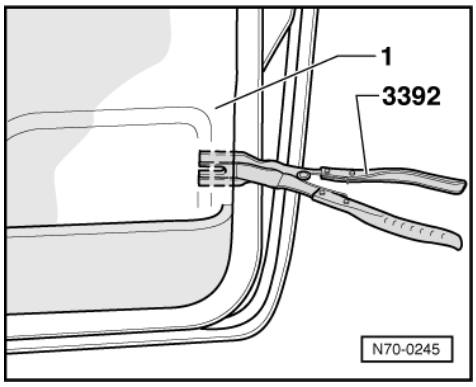

- -> Press trim -1- off door with pliers 3392 and take off trim.

satelettronica

Installing

Install in reverse order.

2.8 - Removing and installing door insulation sheeting

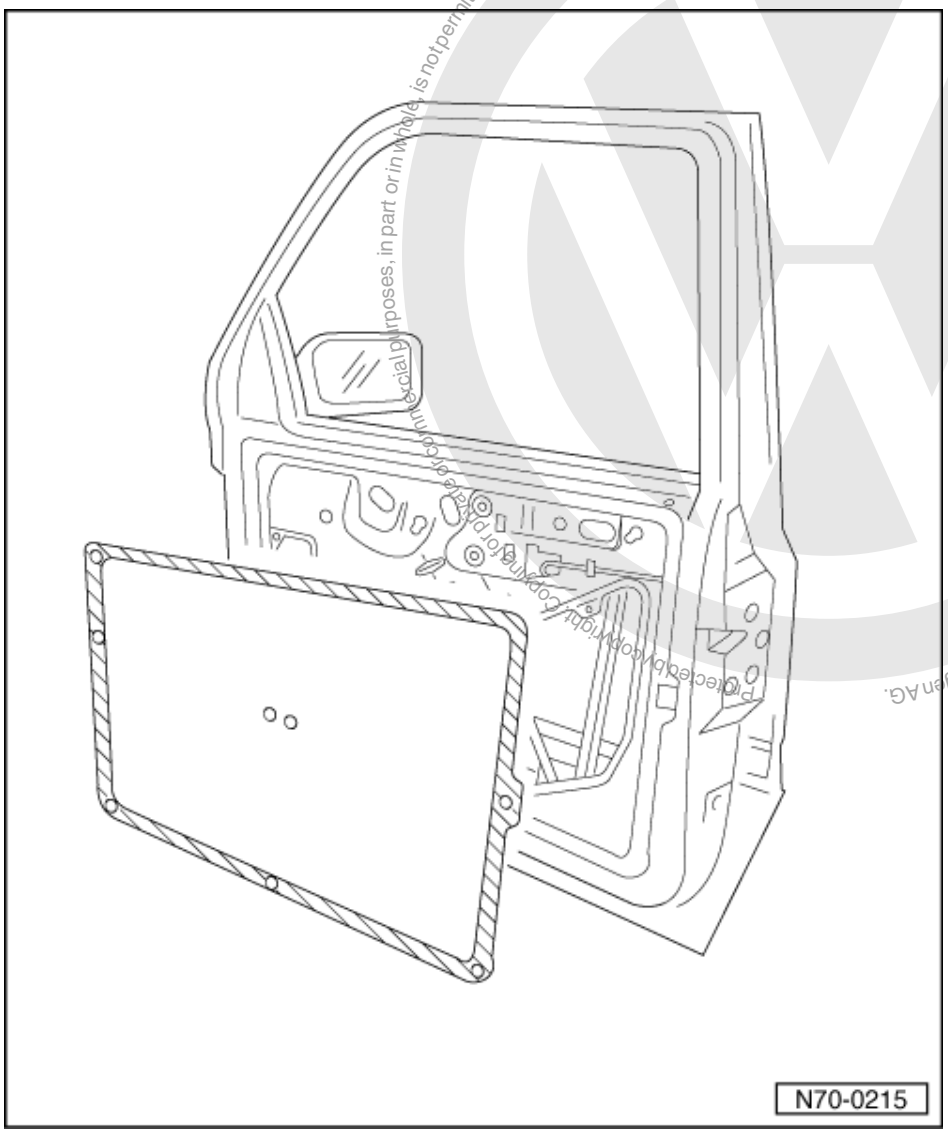

The purpose of insulation sheeting is to seal off passenger compartment from noise, water penetration and drafts

Replacement part insulation sheeting is supplied self-adhesive.

Insulation sheet must always be installed carefully and without creases. When it is renewed, the adhesive surfaces on the door must be cleaned and the new insulation sheeting fixed from top to bottom without any creases.

If adhesion is insufficient, use double-sided adhesive tape AKL 434 019 25.

Adhesive surface: shaded area

Protected by copyright. Copying for private or commercial purposes, in part or in whole, is not permitted unless authorised by Volkswagen AG. Volkswagen AG does not guarantee or accept any liability with respect to the correctness of information in this document. Copyright by Volkswagen AG.
satelettronica

Special tools, testers and auxiliary items

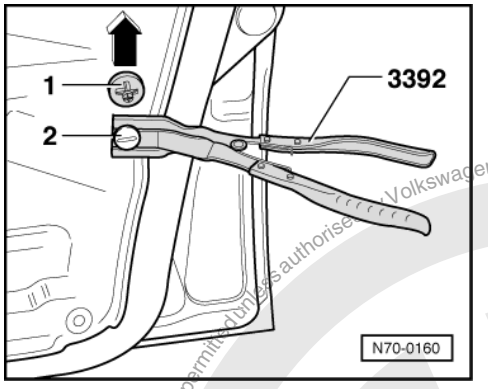

- Pliers 3392
- Pliers V.A.G 1663

Removing

- Remove door trim => Page 106 .
- -> Take off clip upper part -1- -arrow-.
- Press clip lower part -2- off door using pliers 3392.

Note:

Check clip lower part for damage and renew when assembling if necessary.

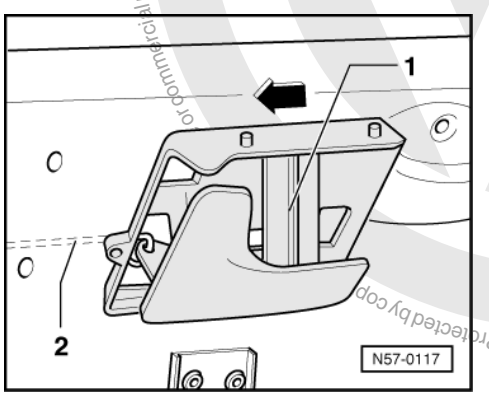

- -> Press inner release handle -1- to rear -arrow- and pull out of the securing holes.
- Unhook rods -2-.

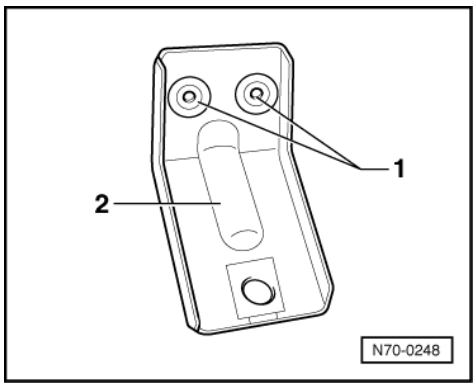

- -> Drill out door pull handle bracket -2- pop rivets -1- or remove screws using a screwdriver and take off.

Installing

- Pass door electrical wiring connections (window lifter, speaker and exterior mirror adjustment) and operating rods, through insulation sheeting and pull adhesive material protective strip off.
- Align insulation sheeting, according to securing clip installation holes, and press on.

Protected by copyright. Copyright by Volkswagen AG. Volkswagen AG does not guarantee or accept any liability with respect to the correctness of information in this document. Copyright by Volkswagen AG.
satelettronica

- Check that insulation sheeting is securely bonded to door (especially lower section).
- Install bracket using pop rivets and pliers V.A.G 1663 or install using cross-head screws.

Protected by copyright. Copying for private or commercial purposes, in part or in whole, is not permitted unless authorised by Volkswagen AG. Volkswagen AG does not guarantee or accept any liability with respect to the correctness of information in this document. Copyright by Volkswagen AG.

3 - Pillars and side trims

3.1 - Pillars and side trims

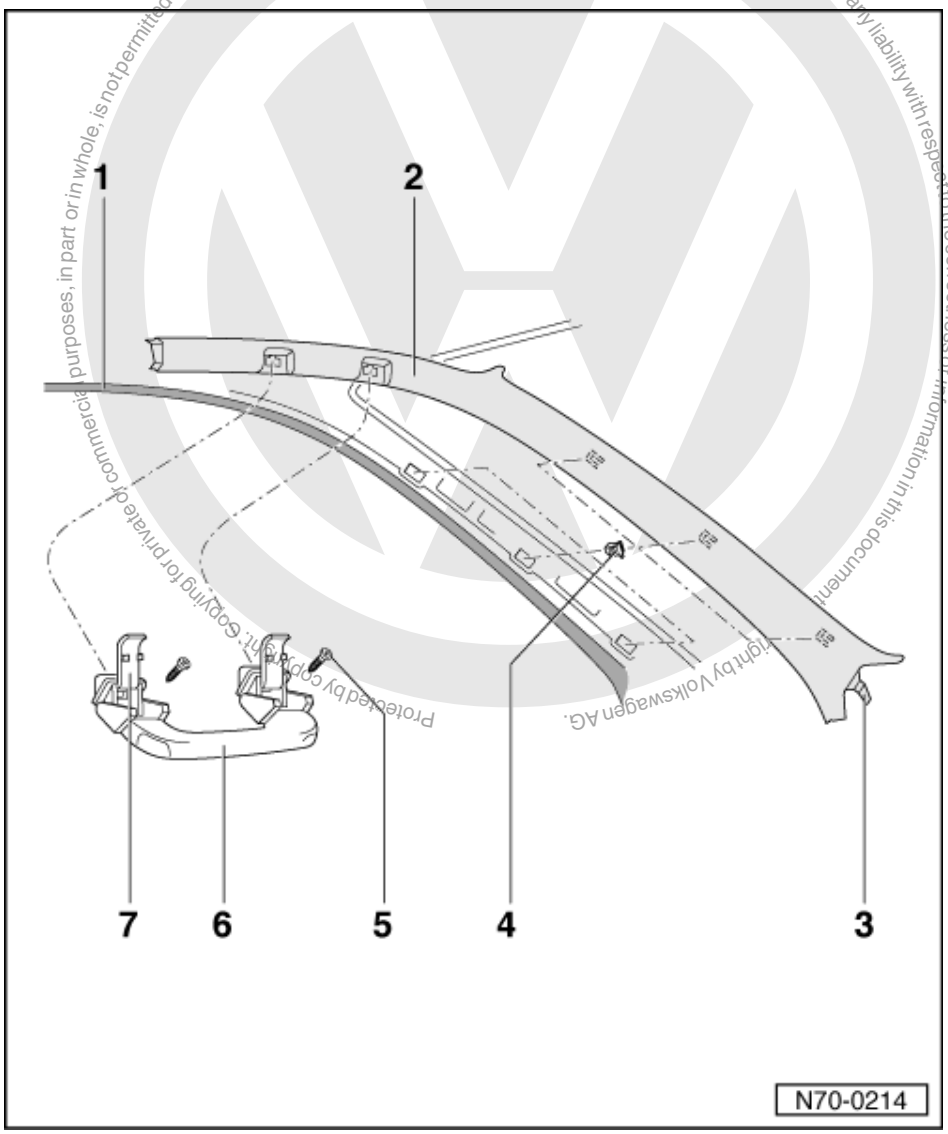

3.2 - Removing and installing A pillar trim

1 Seal
- ◆ After installing ensure seal is seated correctly

2 Trim
- ◆ Removing:
- Remove grab handle - 6 -.
- Pull trim off and unhook retaining lugs - 3 -.
- ◆ Installing:
- Check seating and condition of clips - 4 - and correct or renew if necessary.
- Hook-in retaining lugs - 3 - first.

3 Retaining lug

satelettronica

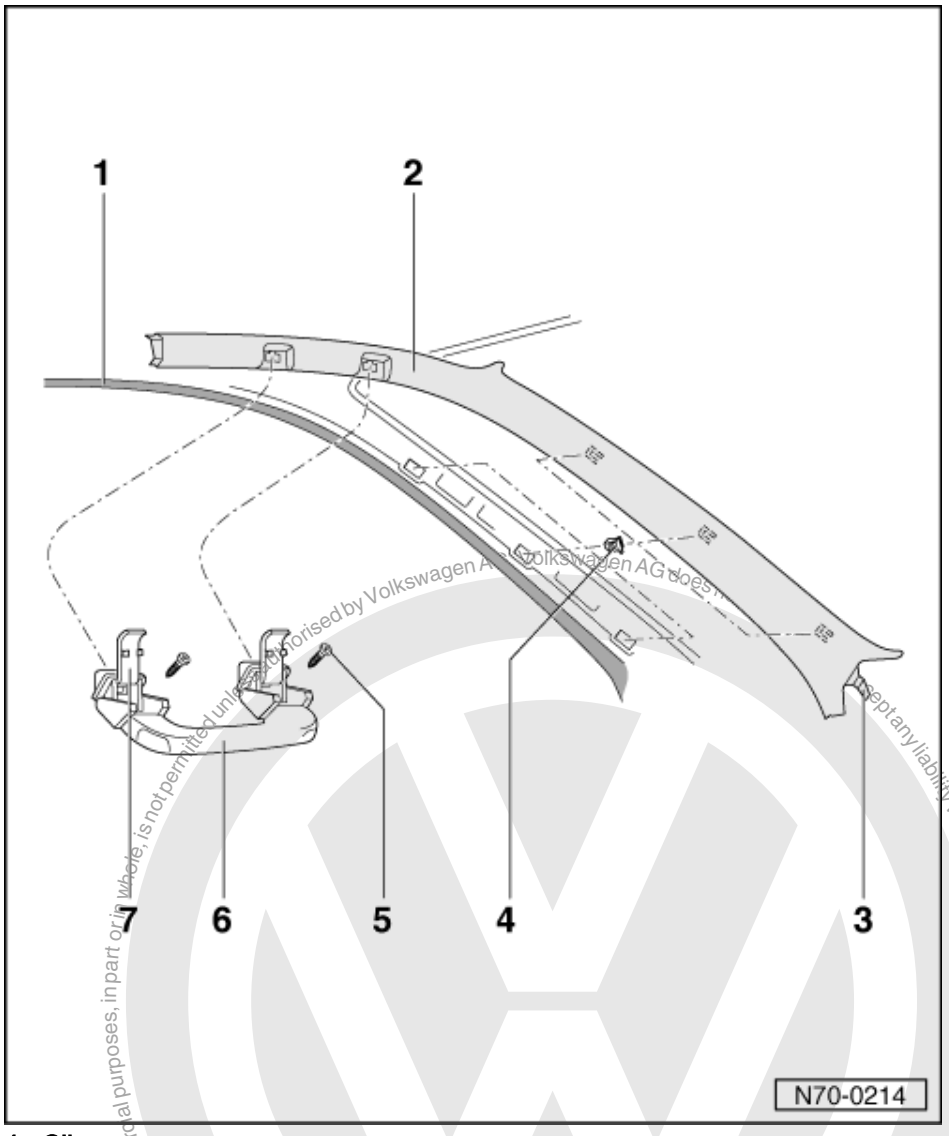

4 Clip
- Pushed into A pillar trim mounting

5 Cross-head screw

6 Grab handle
- Trim covers only on driver's side.
- Removing:
- Pull grab handle down.
- Open trim covers - 7 - using a screwdriver.
- Unscrew cross-head screws - 5 - and take off grab handle.

7 Cover
- Part of grab handle - 6 -

satelettronica

3.3 - Removing and installing B pillar upper trim (Caddy)

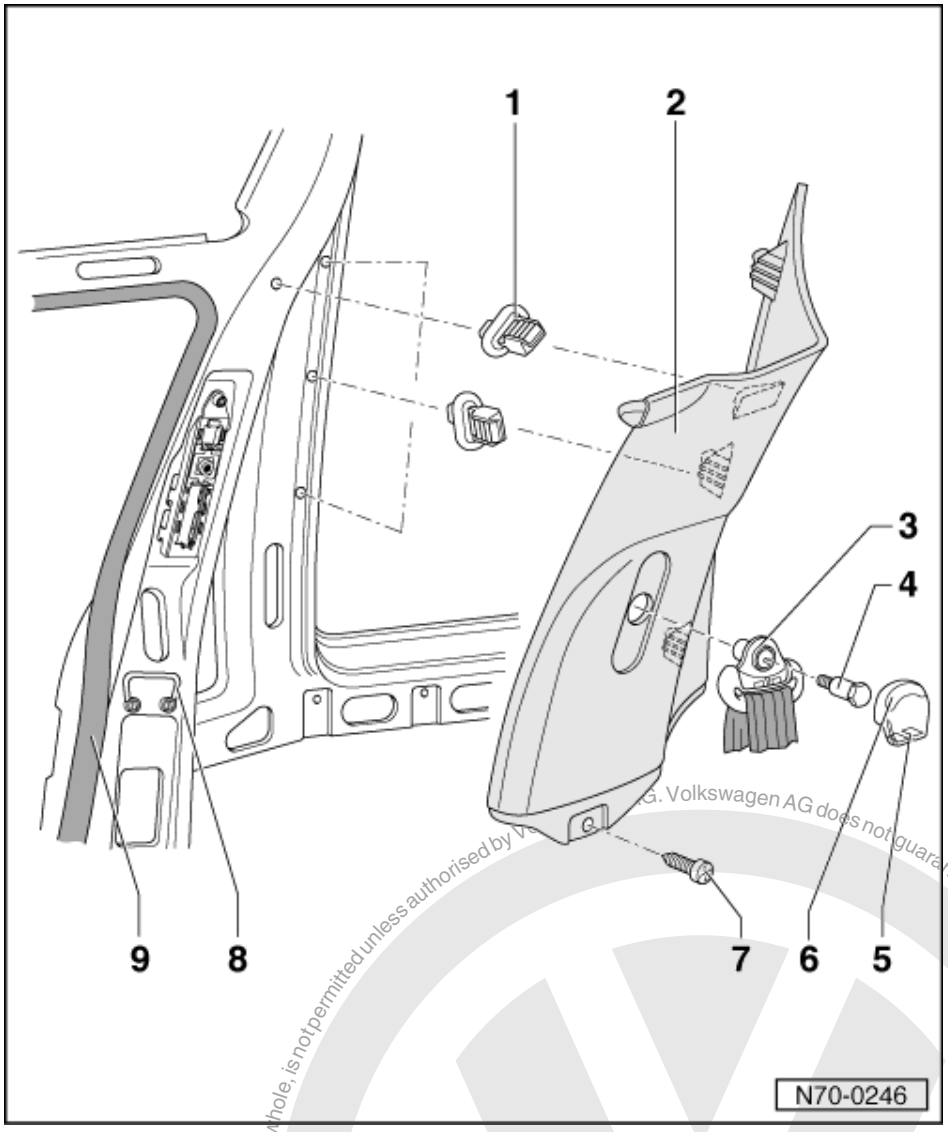

1 Clip
- Qty. 4
- Removing:
- Turn clip through 90° and pull out of B pillar mounting.

2 Trim
- Removing:
- Release locking lugs - 5 - and unclip cover - 6 - upwards.
- Unbolt relay - 3 -.
- Pull top of side panel off slightly in area of B pillar.
- Unscrew cross-head screws - 7 -.
- Remove belt guide - 8 -.
- Unclip trim from B pillar, beginning at bottom.

Protected by copyright. Copying for private or commercial purposes, in part or in whole, is not permitted unless authorised by Volkswagen AG. Volkswagen AG does not guarantee or accept any liability with respect to the correctness of information in this document. Copyright by Volkswagen AG.
satelettronica

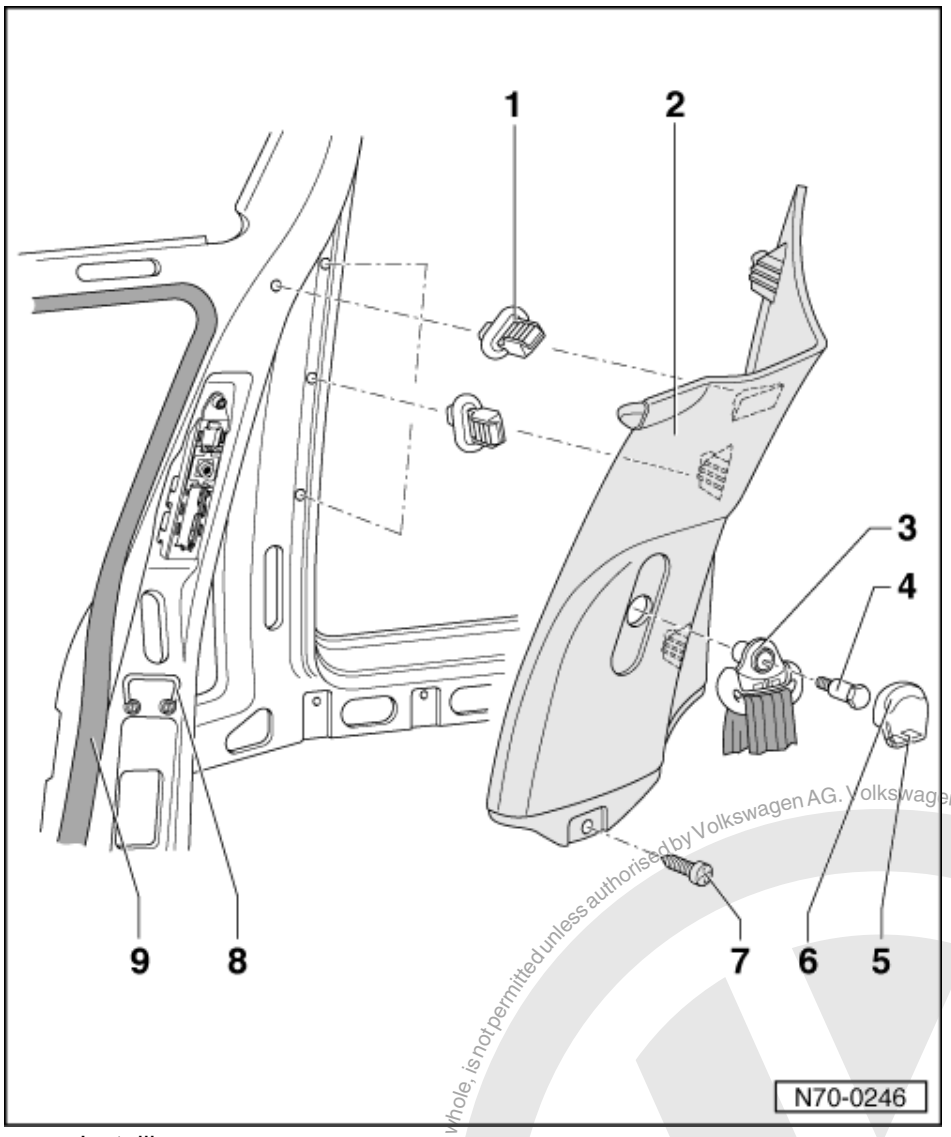

- Installing:
  - Check seating and condition of clips - 1 - and correct or renew as necessary.
  - Check function of belt height adjuster.

3 Belt relay

4 Hexagon bolt
- 40 Nm

5 Locking lug

6 Cap

7 Cross-head screw

8 Belt guide
- Secured with 2 cross-head screws
- 1.5 Nm

9 Seal
- After installing ensure seal is seated correctly

Protected by copyright. Copying for private or commercial purposes, in part or in whole, is not permitted unless authorised by Volkswagen AG. Volkswagen AG does not guarantee or accept any liability with respect to the correctness of information in this document. Copyright by Volkswagen AG.
satelettronica

3.4 - Removing and installing side trim (Caddy)

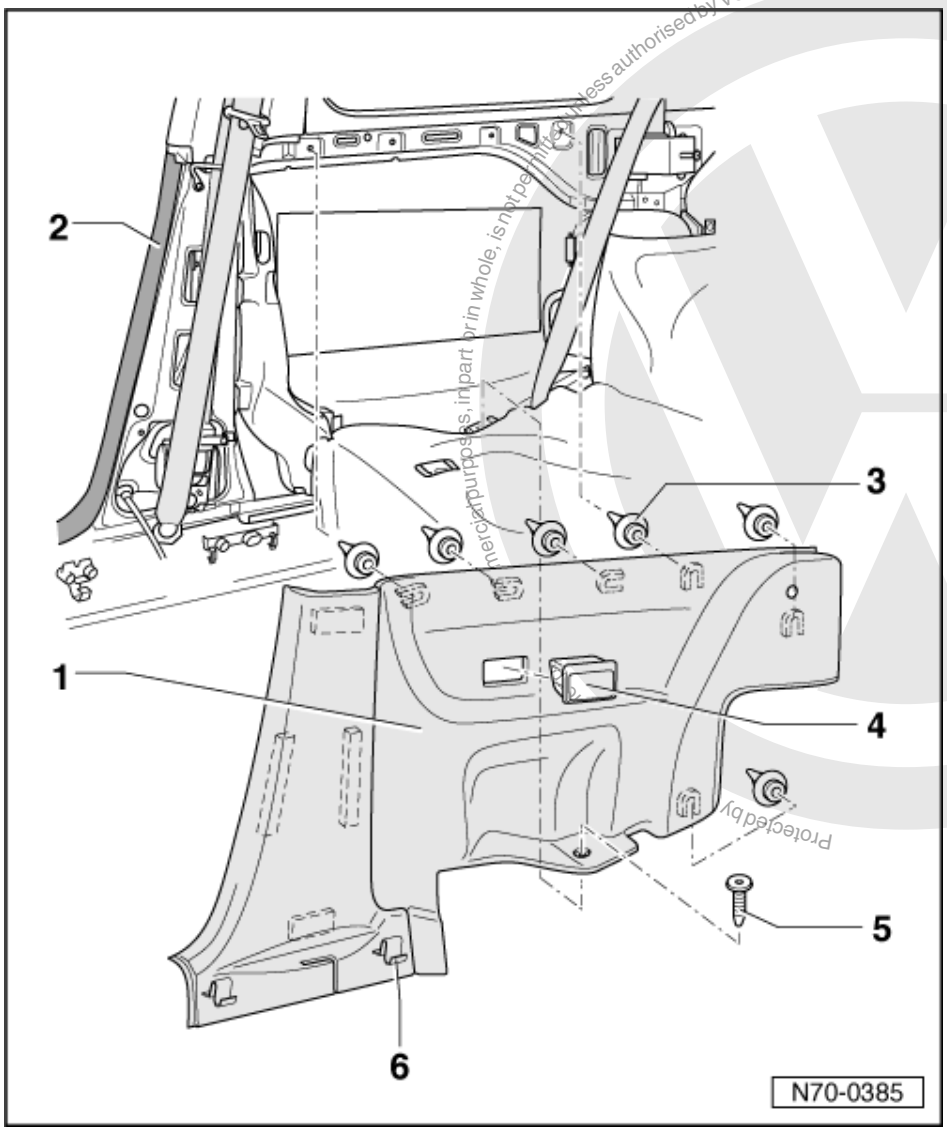

Protected by Copyright by Volkswagen AG. Volkswagen AG does not guarantee or accept any liability with respect to the correctness of information in this document. Copyright by Volkswagen AG. Commercial purposes, in part or in whole, is not permitted unless authorised by Volkswagen AG.
satelettronica

1 Trim

- ◆ Removing:
- Remove seat and backrest => Page 173 .
- Remove sill panel trim=> Page 25 .
- Lever out plug - 5 -.
- Pull trim straight off body in area of clips -3-.
- Pull trim off clips - 6 - .
- ◆ Installing:
- Check seating and condition of clips - 3 - and correct or renew if necessary.
- Ensure clips - 6 - are seated correctly on trim.

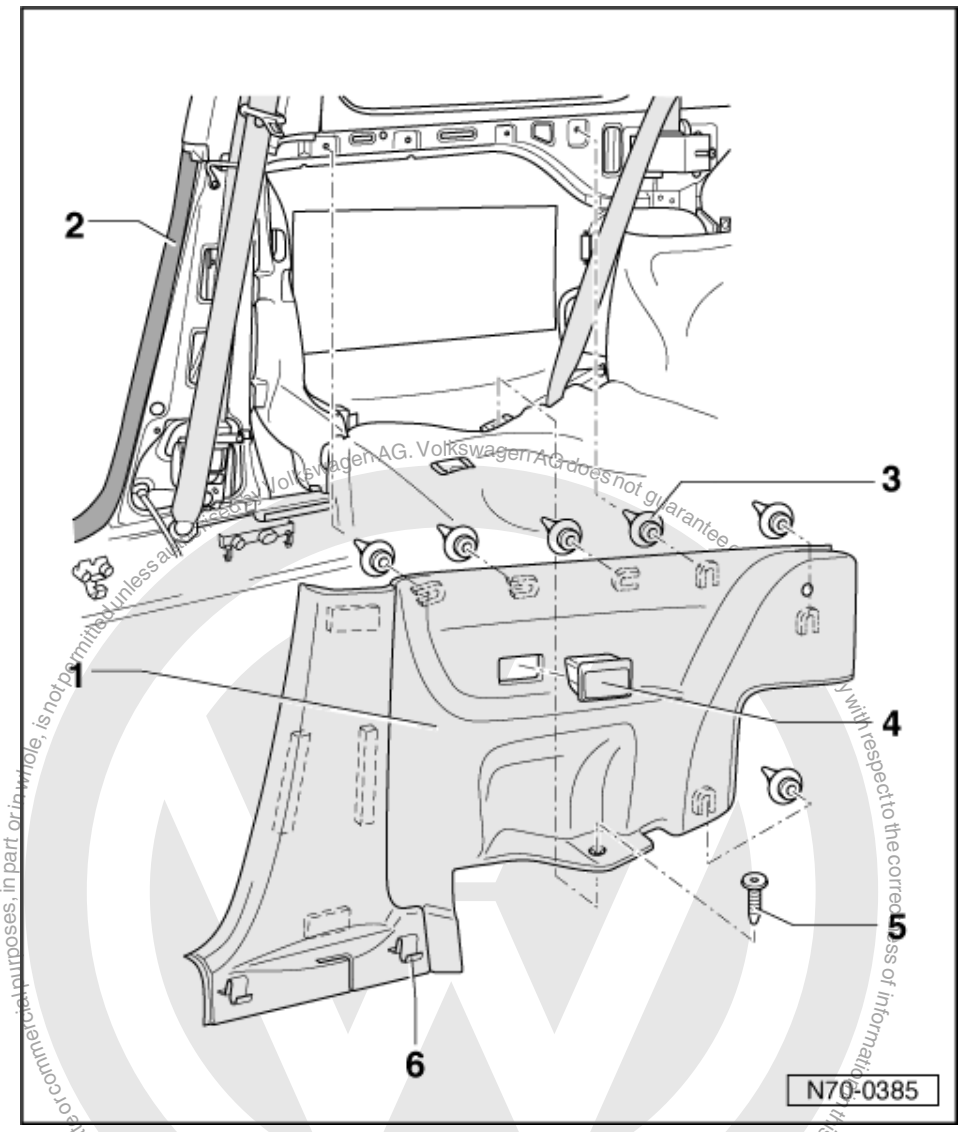

2 Seal
- After installing ensure seal is seated correctly

3 Clip

4 Ashtray

5 Plug
- Lever out with lever 80-200

6 Clip

satelettronica

3.5 - Removing and installing B pillar trim (Polo Classic, Polo Estate)

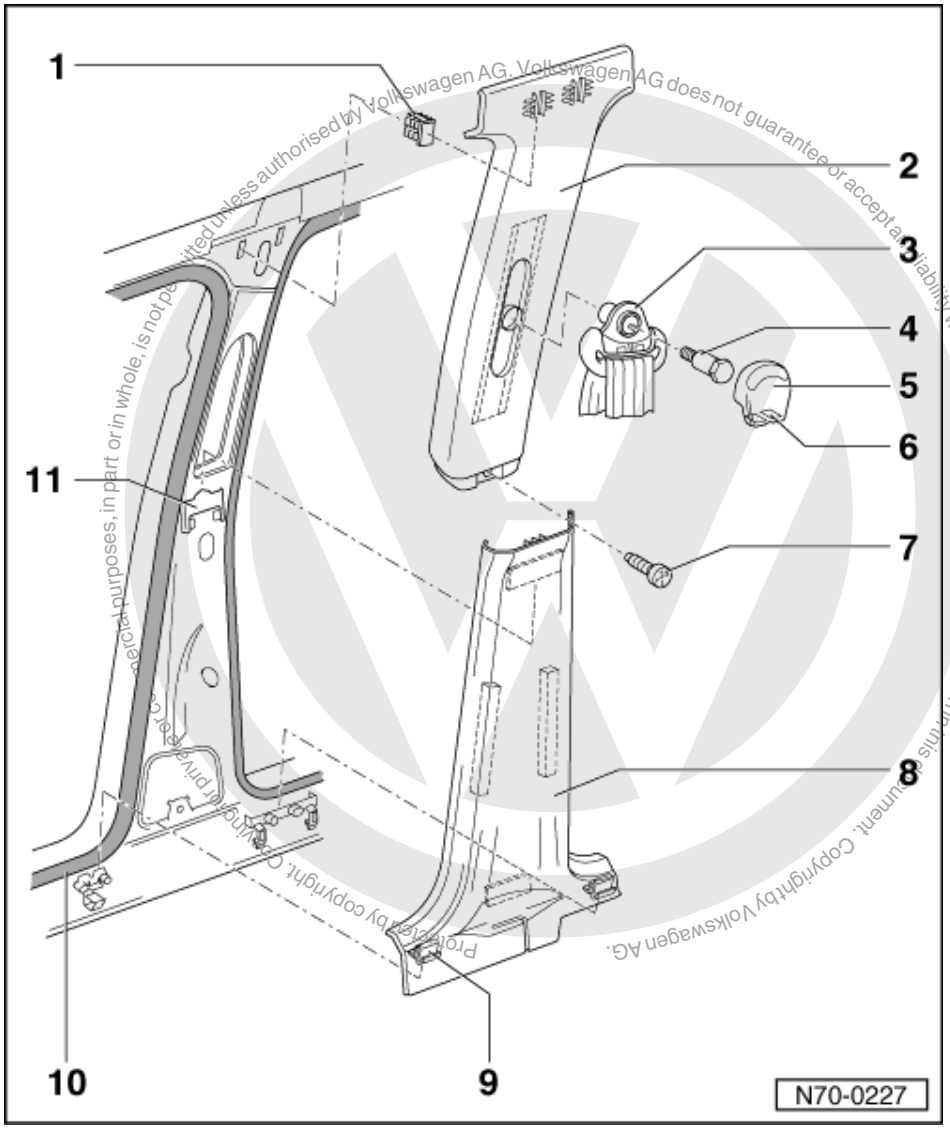

Volkswagen AG. Volkswagen AG does not guarantee or accept any liability with respect to the correctness of information in this document. Copyright by Volkswagen AG.
Protected by copyright. Copying for private and commercial purposes, in part or in whole, is not permitted unless authorised by Volkswagen AG.

1 Clip
- Pushed into B pillar trim mounting

2 Upper trim
- Removing:
- Removing lower trim.
- Release locking lugs - 6 - and unclip cover - 5 - upwards.
- Unbolt relay - 3 -.
- Remove belt guide - 11 -.
- Unscrew cross-head screws - 7 -.
- Unclip trim from B pillar.
- Installing:
- Check seating and condition of clips - 1 - and correct or renew as necessary.
- Check function of belt height adjuster.

satelettronica

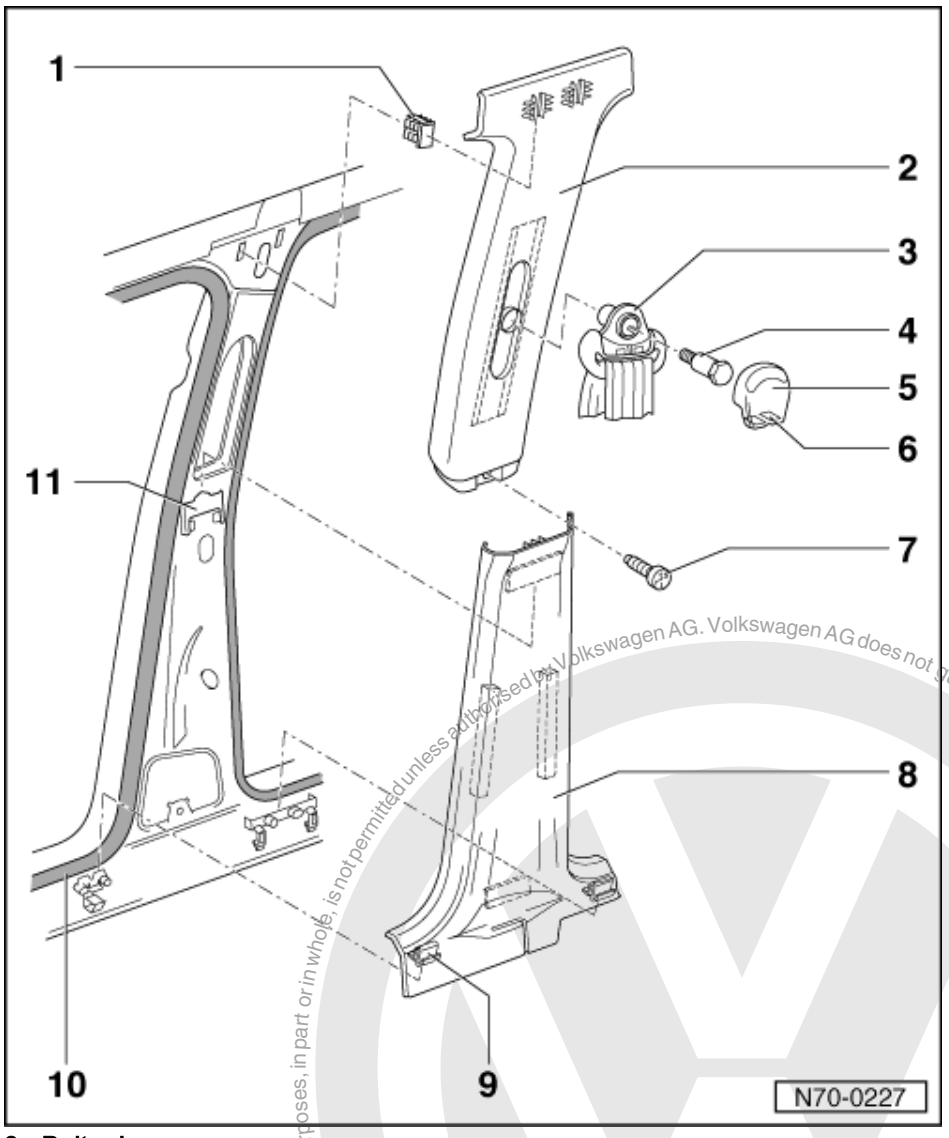

3 Belt relay
4 Hexagon bolt
- 40 Nm

5 Cover

6 Locking lug

7 Cross-head screw

8 Lower trim
- Removing:
- Loosen sill and lower C pillar trim in the area of B pillar.
- Pull trim off B pillar upwards along the seal and take top off belt guide - 11 -.
- Installing:
- Check seating and condition of clips - 9 - and correct or renew if necessary.

Copyright by Volkswagen AG. Volkswagen AG does not guarantee or accept any liability with respect to the correctness of information in this document. Copyright by Volkswagen AG. Protected by copyright. Copying for private or commercial purposes, in part or in whole, is not permitted unless authorised by Volkswagen AG.
satelettronica

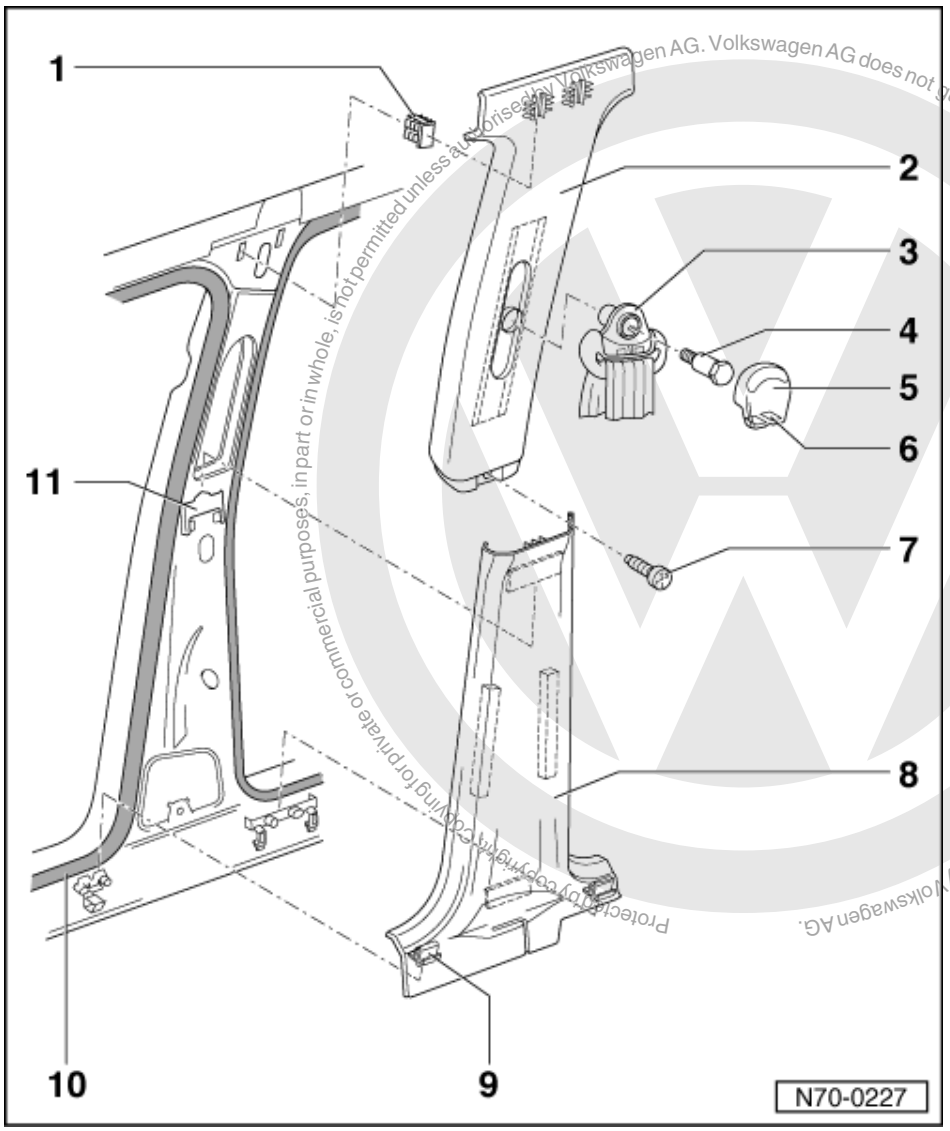

Protected by copyright. Copying for private or commercial purposes, in part or in whole, is not permitted unless authorised by Volkswagen AG. Volkswagen AG does not guarantee or accept any liability with respect to the correctness of information in this document. Copyright by Volkswagen AG.

satelettronica

9 Clip

10 Seal

- After installing ensure seal is seated correctly

11 Belt guide

- Secured with 2 cross-head screws
- 1.5 Nm

3.6 - Removing and installing C and D pillar trim (Polo Classic)

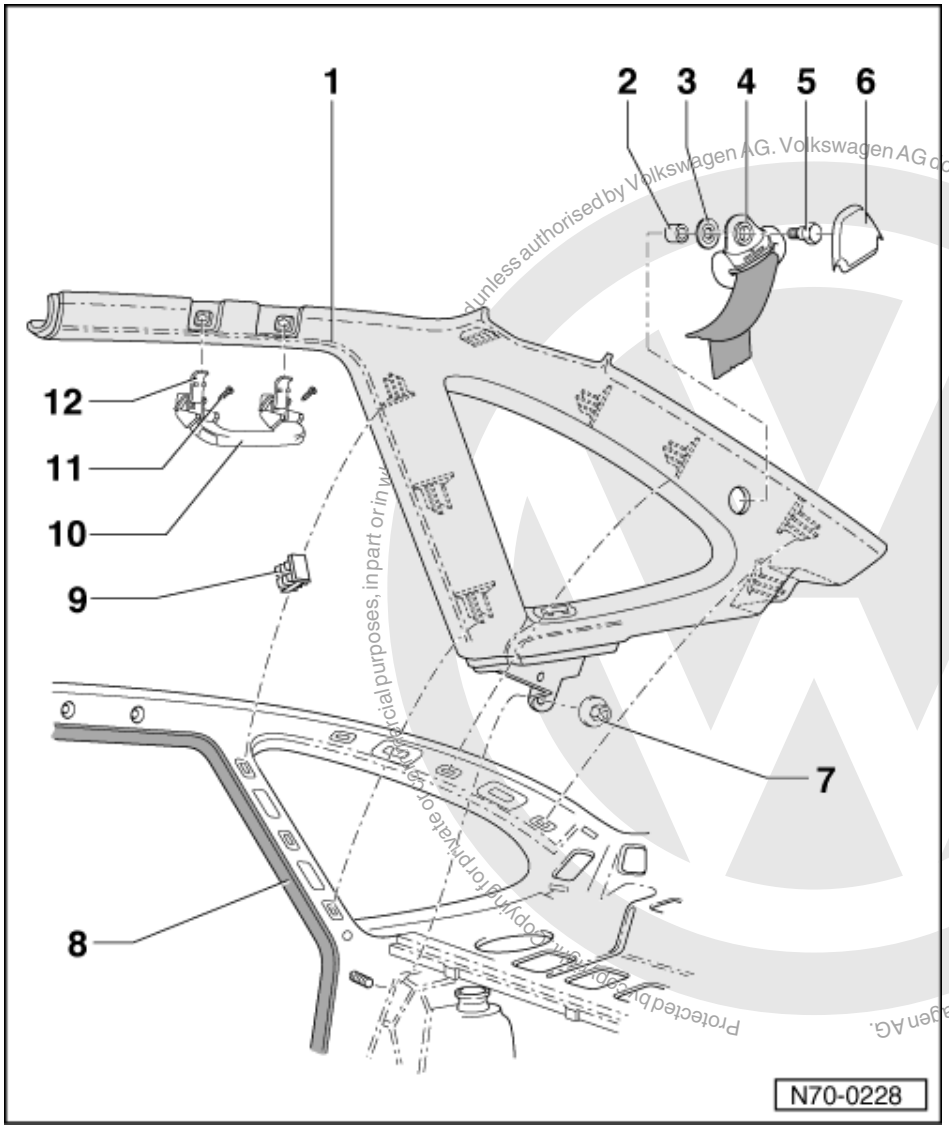

Protected by copyright. Copying for private or commercial purposes, in part or in whole, unless authorised by Volkswagen AG. Volkswagen AG does not guarantee or accept any liability with respect to the correctness of information in this document. Copyright by Volkswagen AG.

satelettronica

1 Trim

- ◆ Removing:
- Remove rear shelf => Page 138 .
- Pull off roof headlining end trim strip.
- Remove C pillar lower trim => Page 122 .
- Unclip cover - 6 -.
- Unbolt relay - 4 -.
- Remove shouldered hexagon nuts - 7 -.
- Remove grab handle - 10 -.
- Unclip trim from C and D pillar.
- ◆ Installing:
- Check seating and condition of clips - 9 - and correct or renew if necessary.

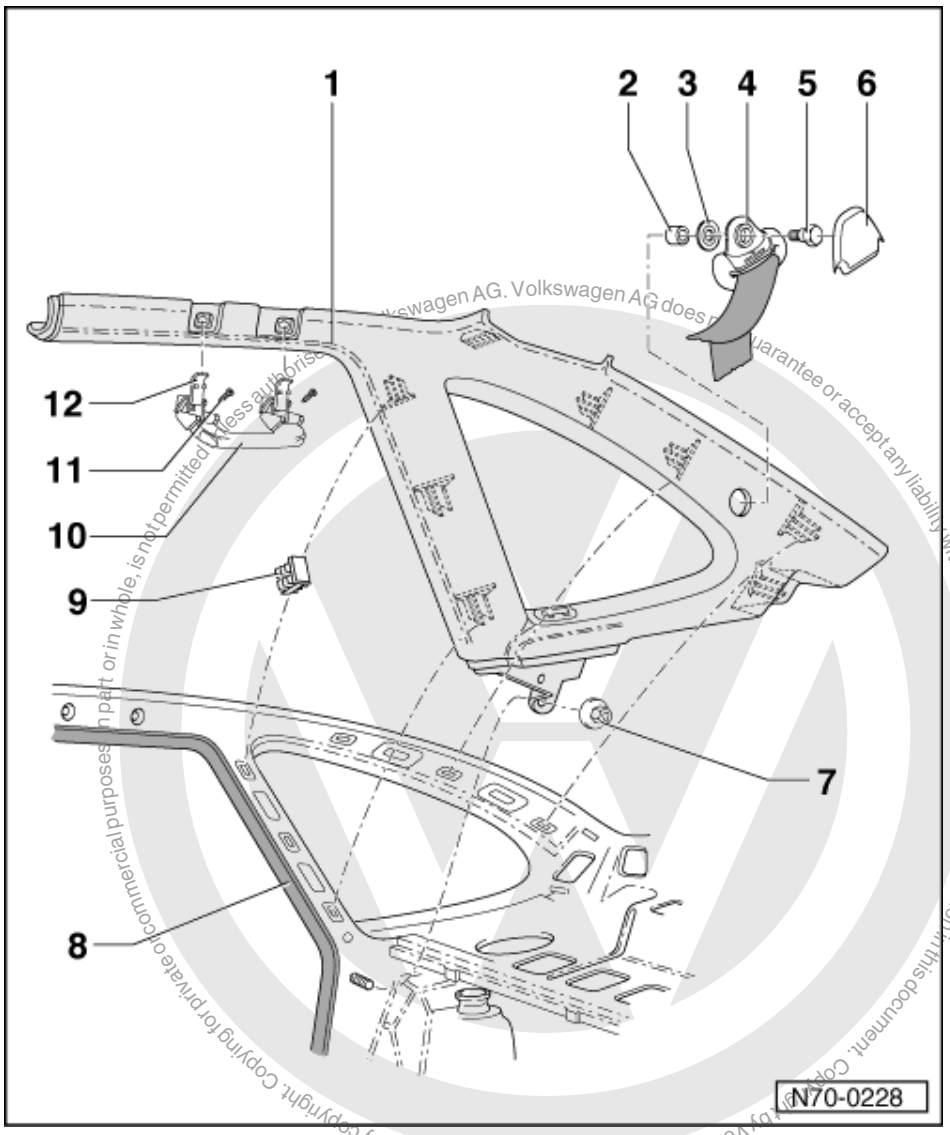

Protected by copyright. Copying for private or commercial purposes, in part or in whole, is not permitted unless authorised by Volkswagen AG. Volkswagen AG does not guarantee or accept any liability with respect to the correctness of information in this document. Copyright by Volkswagen AG.

2 Spacer sleeve
3 Special washer
4 Belt relay
5 Hexagon bolt
- 40 Nm

6 Cover
7 Shouldered hexagon nut
8 Seal
- After installing ensure seal is seated correctly

9 Clip
- Pushed into C and D pillar trim mounting

satelettronica

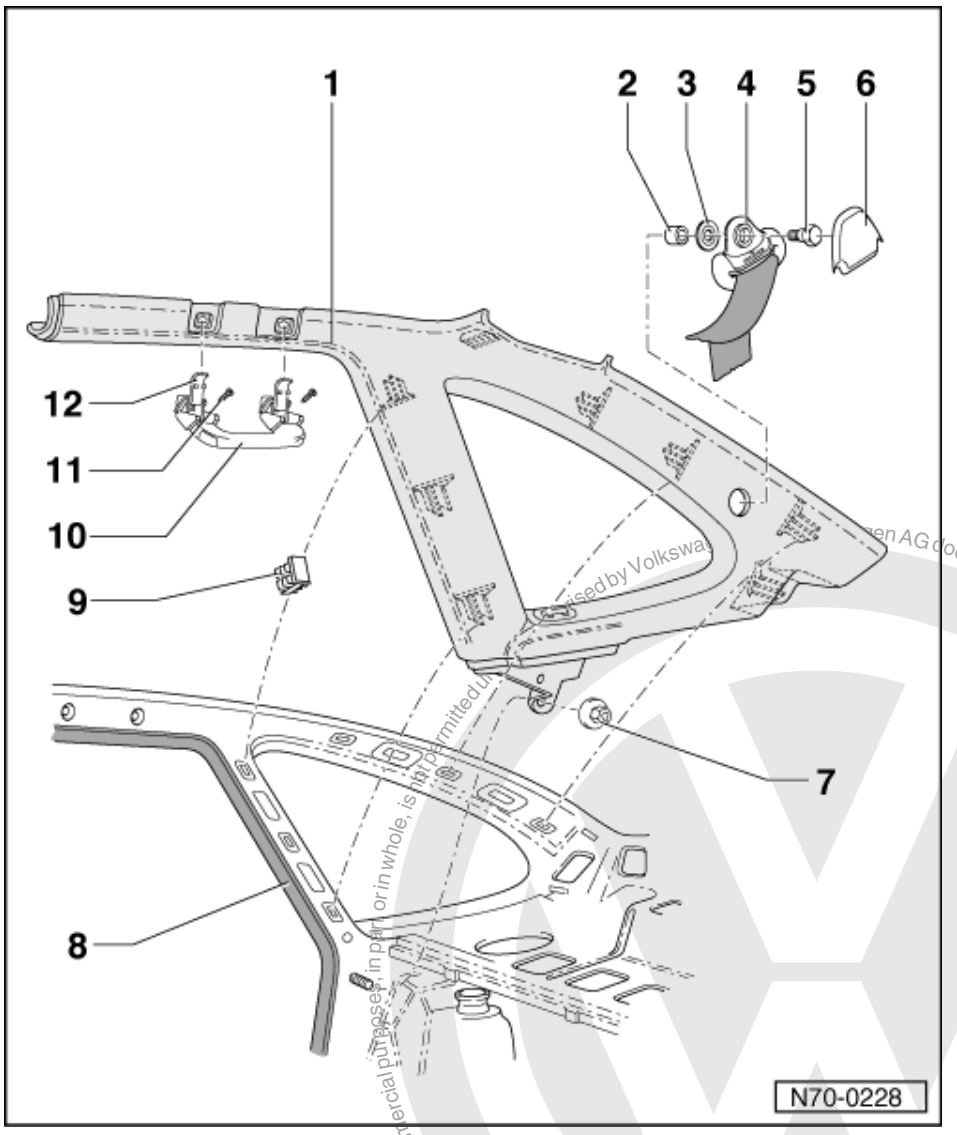

10 Grab handle

- Removing:
- Pull grab handle down.
- Open trim covers - 12 - using a screwdriver.
- Unscrew cross-head screws - 11 - and take off grab handle.

11 Cross-head screw

12 Cover

- Part of grab handle - 10 -

Protected by copyright. Copying for private or commercial purposes, in part or in whole, is not permitted unless authorised by Volkswagen AG. Copyright by Volkswagen AG. Volkswagen AG does not guarantee or accept any liability with respect to the correctness of information in this document.
satelettronica

3.7 - Removing and installing C pillar lower trim (Polo Classic)

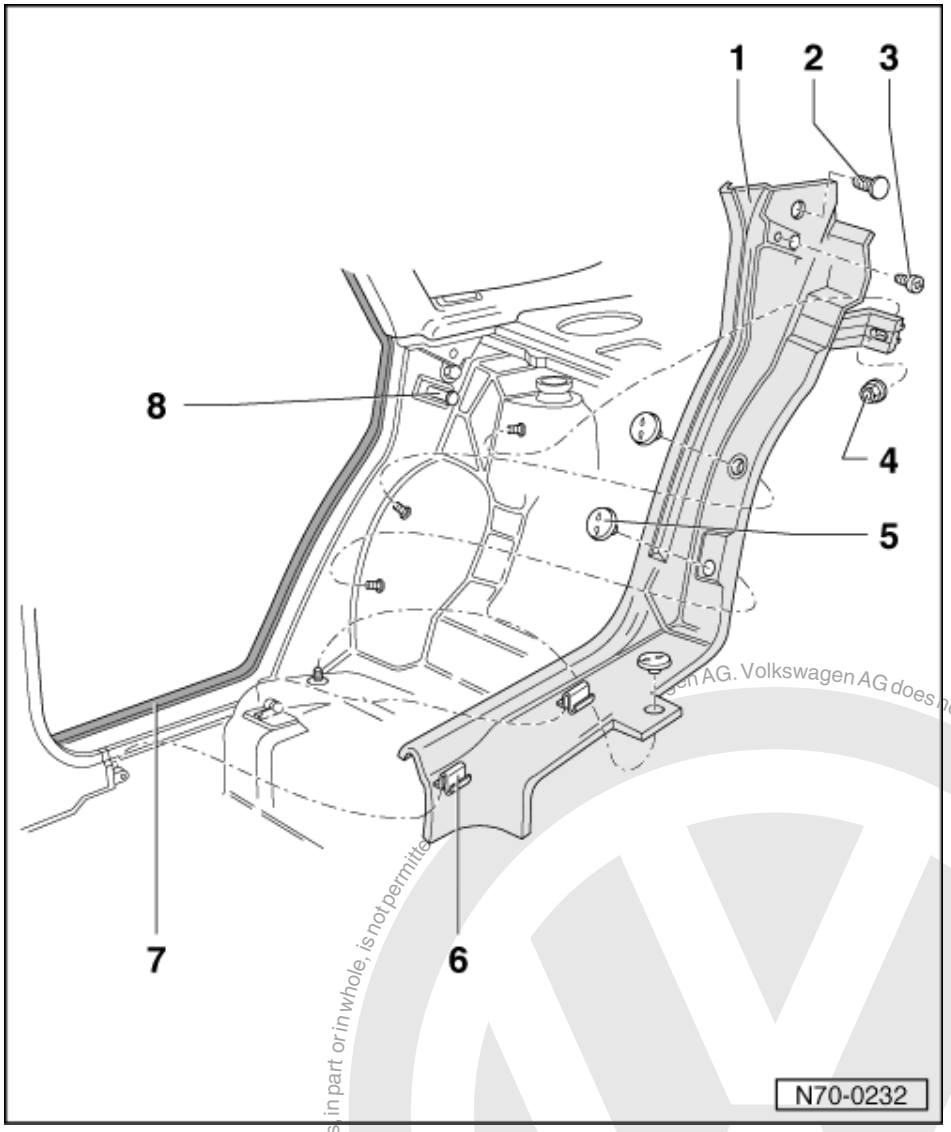

1 Trim
- Removing:
- Remove rear shelf => Page 138 .
- Unscrew press studs - 5 -.
- Remove cross-head screw - 3 - and shouldered hexagon nut - 4 -.
- Pull trim off clips - 6 -.

2 Plug
- Lever out with special tool 80-200

3 Cross-head screw

4 Shouldered hexagon nut

Protected by copyright. Copying for private or commercial purposes, in part or in whole, is not permitted unless authorised by Volkswagen AG. Volkswagen AG does not guarantee or accept any liability with respect to the correctness of information in this document. Copyright by Volkswagen AG.
satelettronica

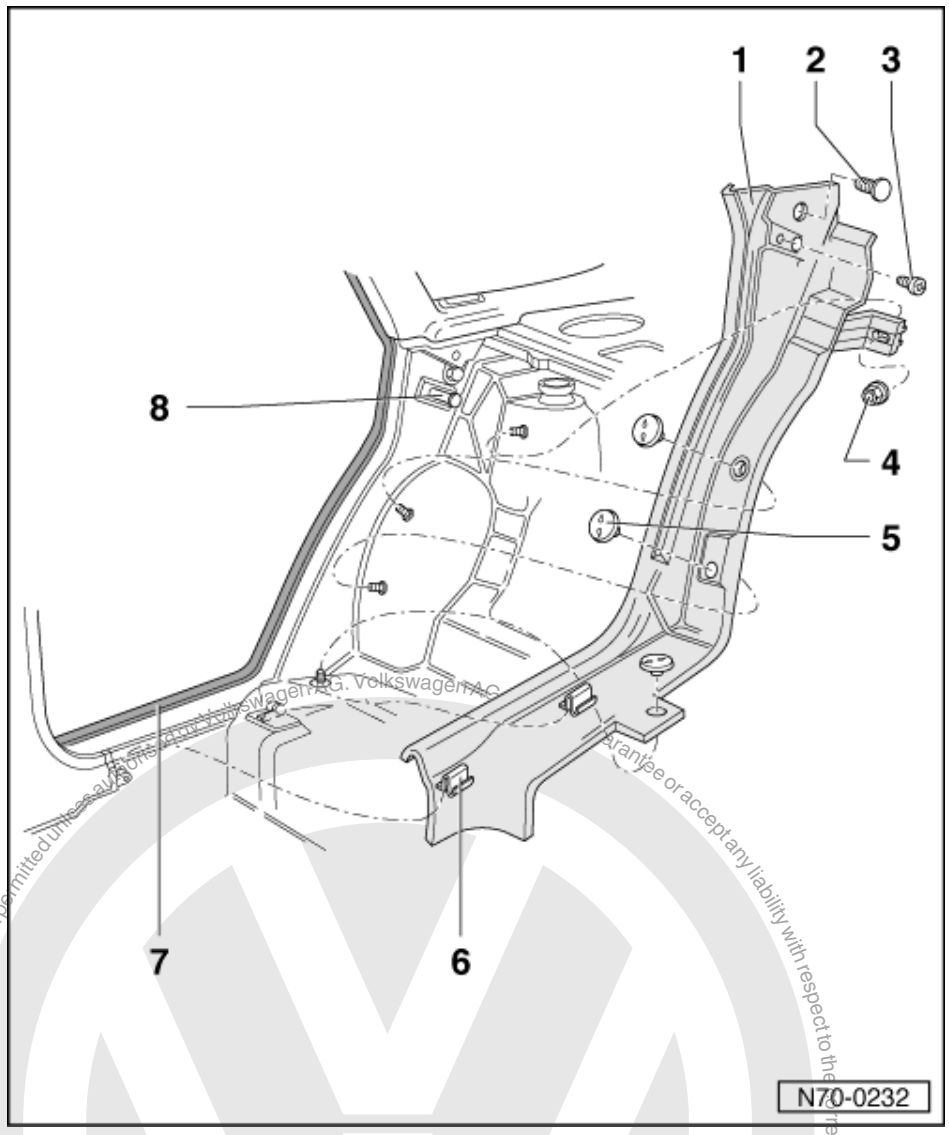

5 Press button
- Removing:
- Release backrest and fold forwards. if necessary fold seat up.
- Unscrew press button from stud.
- Installing:
- Press press button onto stud.

6 Clip

7 Seal
- After installing ensure seal is seated correctly

8 Backrest locking pin
- Removing:
- Release backrest and fold forwards.
- Remove pin with hexagon key.

Protected by copyright. Copyright by Volkswagen AG.
Protected by copyright. Copyright by Volkswagen AG. Volkswagen AG
Reproduction or publication in whole or in part for private or commercial purposes, is not permitted unless authorised by Volkswagen AG.
Volkswagen AG does not guarantee or accept any liability with respect to the correctness of information in this document.
satelettronica

3.8 - Removing and installing C pillar upper trim (Polo Estate)

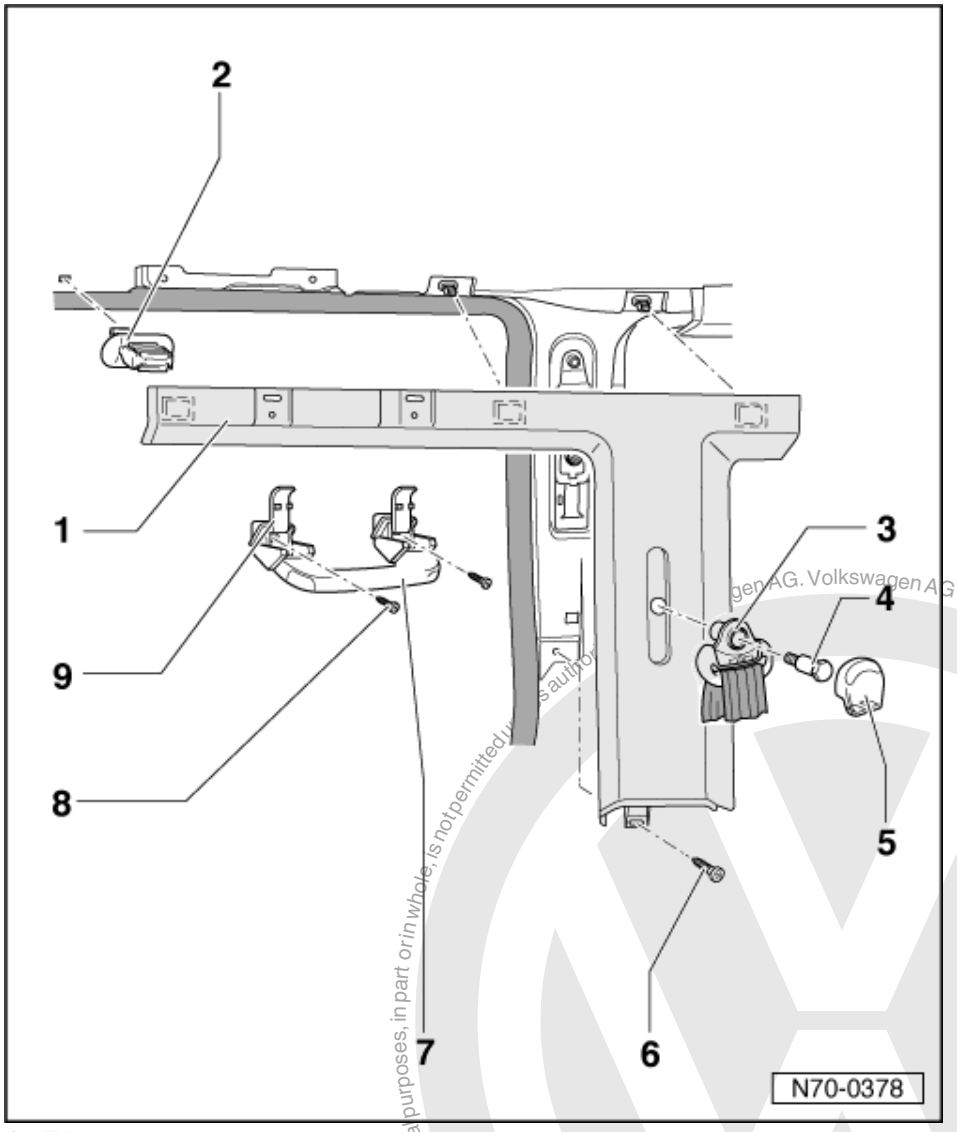

1 Trim
- Removing:
- Remove load area cover => Page 26 .
- Remove C pillar lower trim => Page 126 .
- Remove grab handle - 7 -.
- Unclip cover - 5 -.
- Unbolt relay - 3 -.
- Pull off trim.

2 Clip

3 Belt relay

4 Hexagon bolt
- 40 Nm

Protected by copyright. Copying for private or commercial purposes, in part or in whole, is not permitted unless authorised by Volkswagen AG. Volkswagen AG does not guarantee or accept any liability with respect to the correctness of information in this document. Copyright by Volkswagen AG.
satelettronica

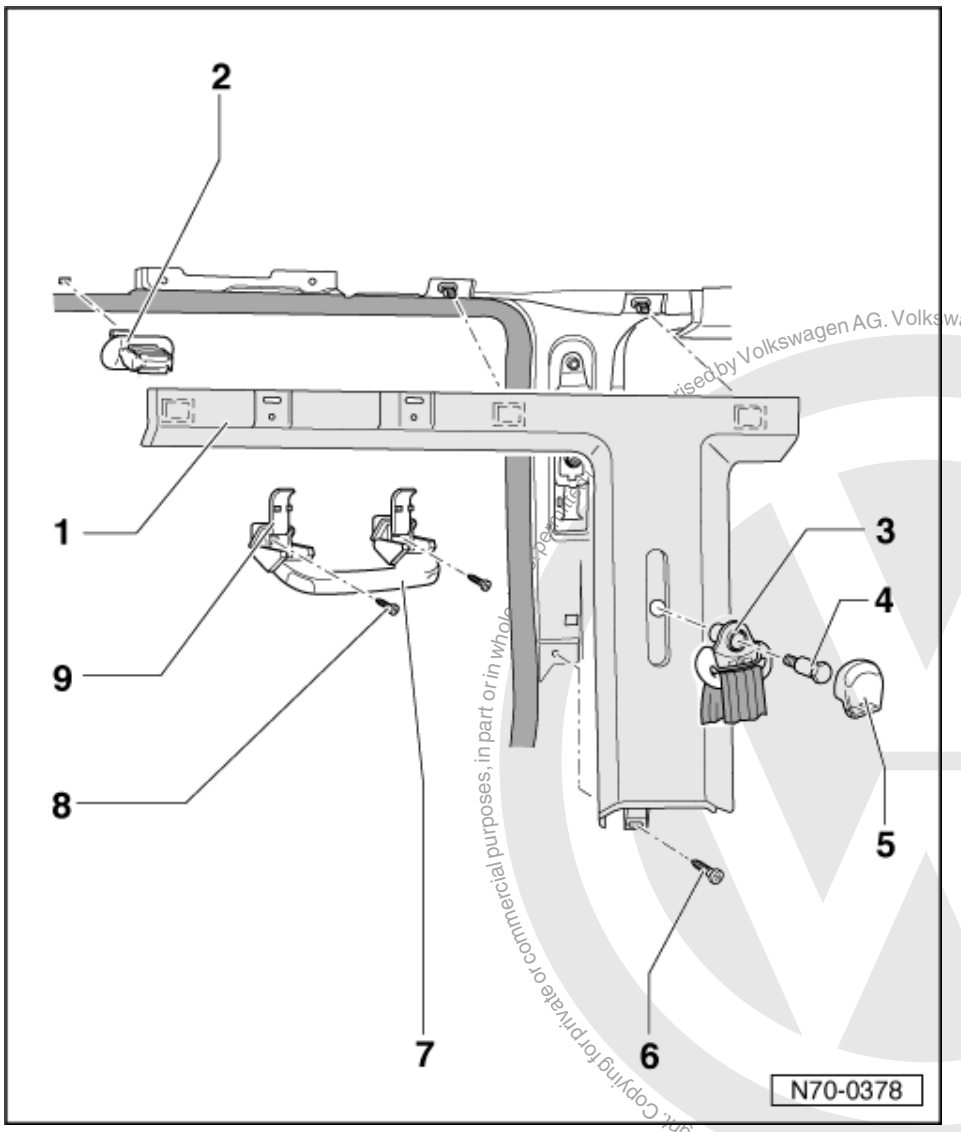

5 Cover

6 Cross-head screw

7 Grab handle

- Removing:
- Pull grab handle down.
- Open trim covers - 9 - using a screwdriver.
- Remove cross-head screws - 8 - and take off grab handle.

8 Cross-head screw

9 Cover cap

- Part of grab handle - 7 -.

Protected by copyright. Copying for private or commercial purposes, in part or in whole, is not permitted unless authorised by Volkswagen AG. Volkswagen AG does not guarantee or accept any liability with respect to the correctness of information in this document. Copyright by Volkswagen AG.
satelettronica

3.9 - Removing and installing C pillar lower trim (Polo Estate)

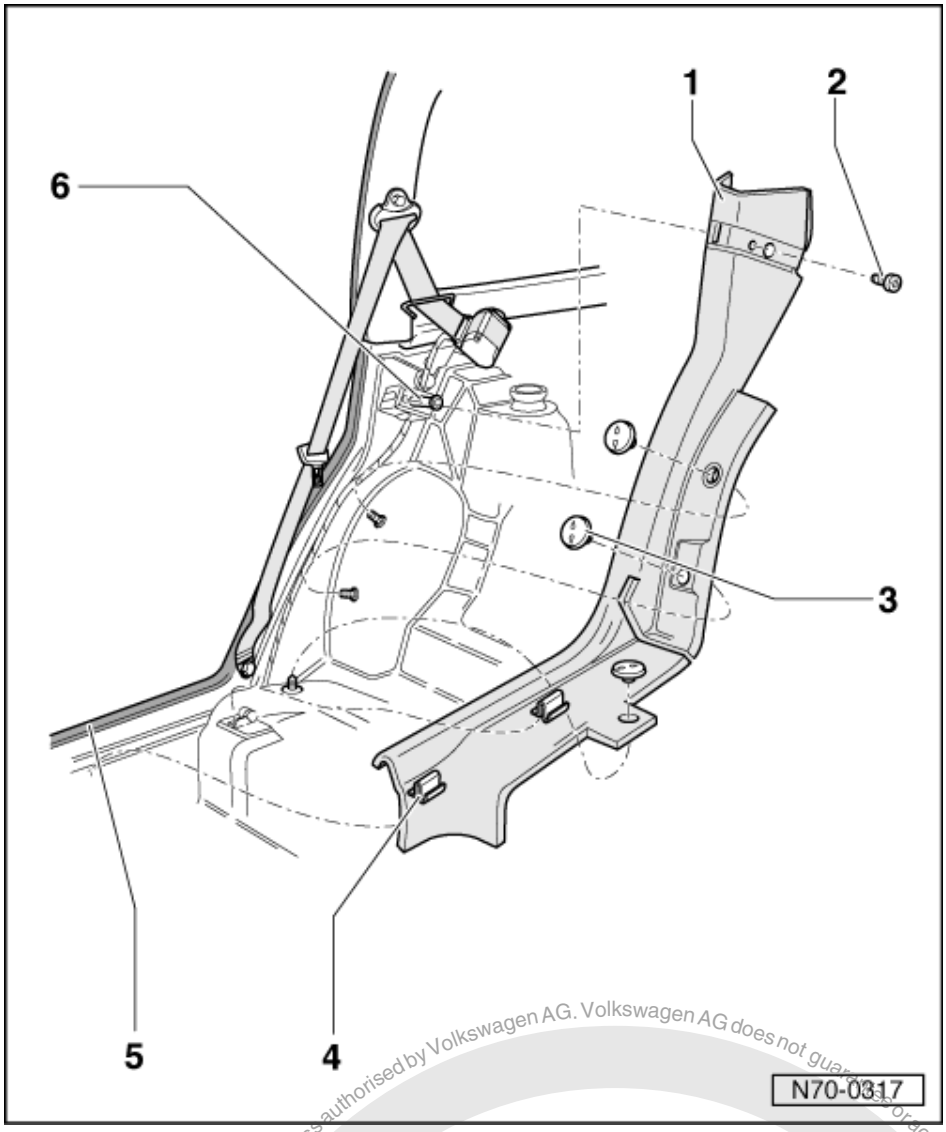

1 Trim

- Removing:
- Remove load area cover => Page 26 .
- Unscrew press buttons - 3 -.
- Remove cross-head screw - 2 -
- Pull trim out of clips - 4 -.

2 Cross-head screw

3 Press button

- Removing:
- Release backrest and fold forwards. if necessary fold seat up.
- Unscrew press button from stud.
- Installing:
- Press press button onto stud.

satelettronica

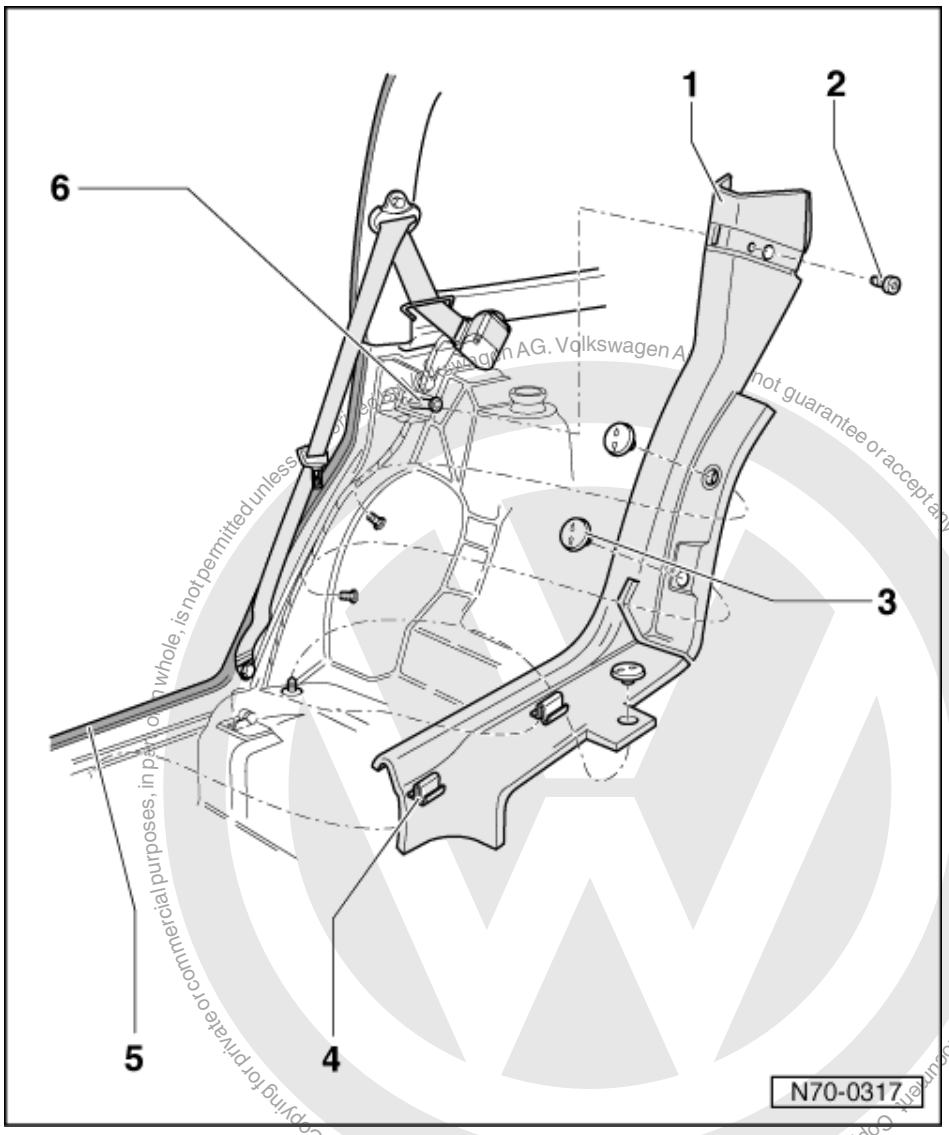

4 Clip

5 Seal

- After installing ensure seal is seated correctly

6 Backrest locking pin

- Removing:
- Release backrest and fold forwards.
- Remove pin with hexagon key.

satelettronica

3.10 - Removing and installing D pillar trim (Polo Estate)

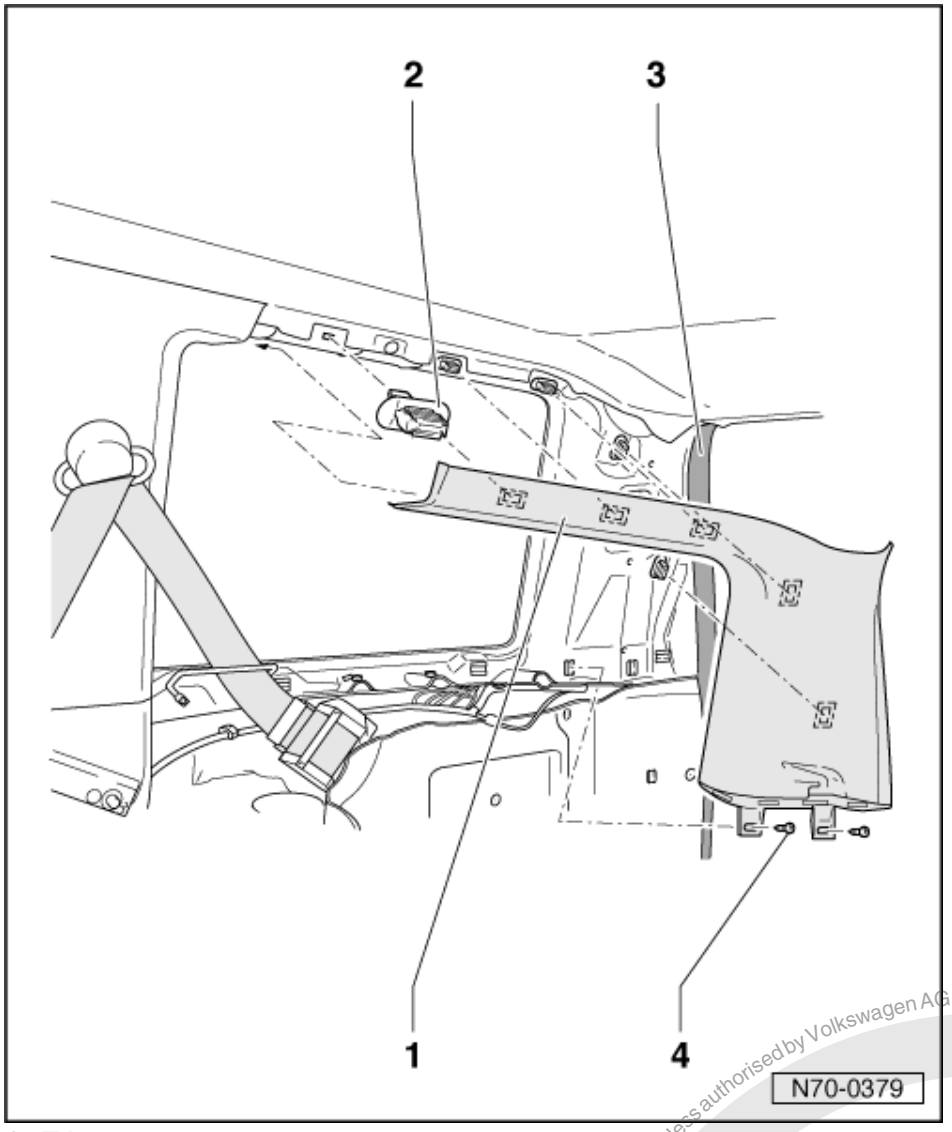

1 Trim

- Removing:
- Remove luggage compartment cover => Page 26 .
- Remove cross-head screws -4-.
- Pull trim off along pillar D and roof edge and pull out from behind C pillar trim.
- Installing:
- Check clip - 2 - seating and correct or renew defective clips if necessary.
- Ensure tailgate seal is seated correctly.

satelettronica
Protected by copyright. Copying for private or commercial purposes, in part or in whole, is not permitted unless authorised by Volkswagen AG. Volkswagen AG does not guarantee or accept any liability with respect to the correctness of information in this document. Copyright by Volkswagen AG.

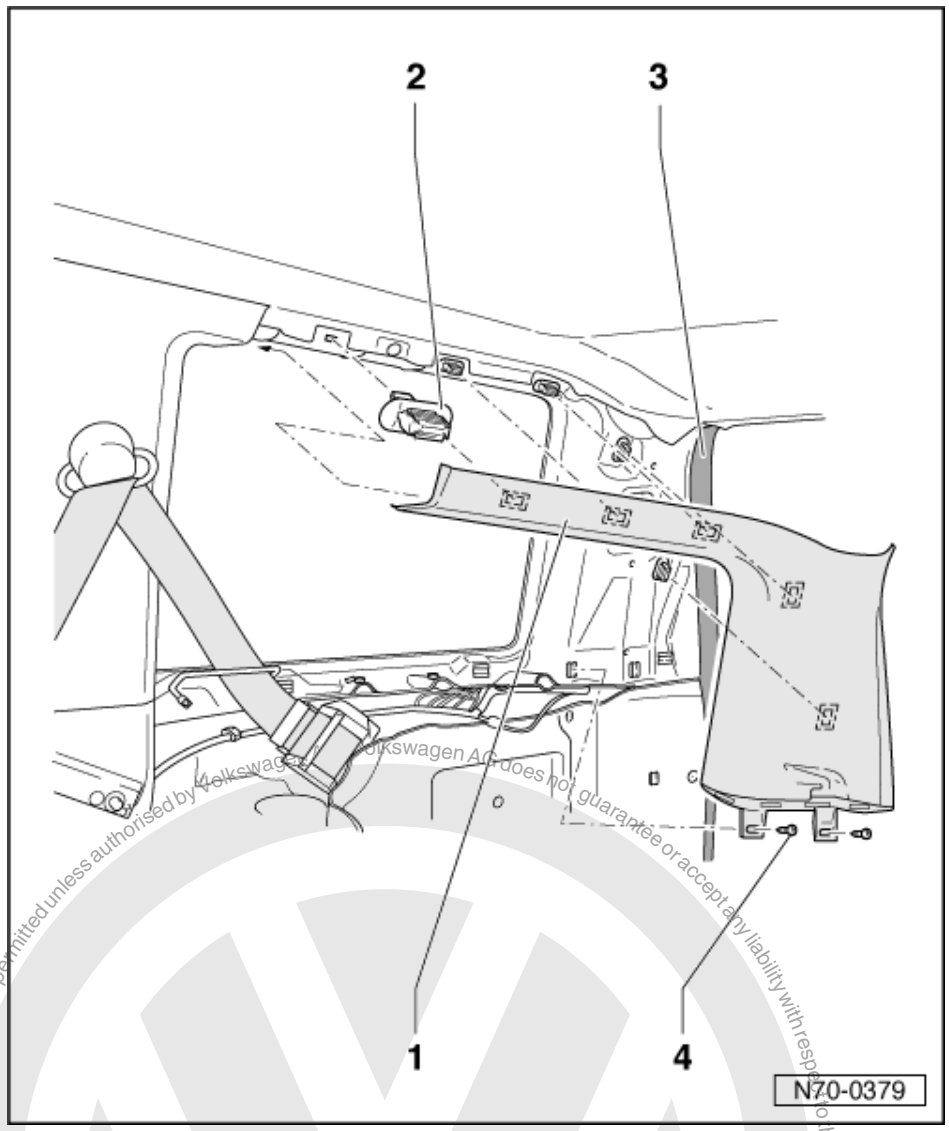

2 Clip
- Clipped into body opening

3 Gasket
- After installing ensure seal is seated correctly

4 Cross-head screw

Protected by copyright. Copying for private or commercial purposes, in part or in whole, is not permitted unless authorised by Volkswagen AG. Copyright by Volkswagen AG. Volkswagen AG does not guarantee or accept any liability with respect to the correctness of information in this document.
satelettronica

4 - Tailgate/boot lid trim

4.1 - Tailgate/boot lid trim

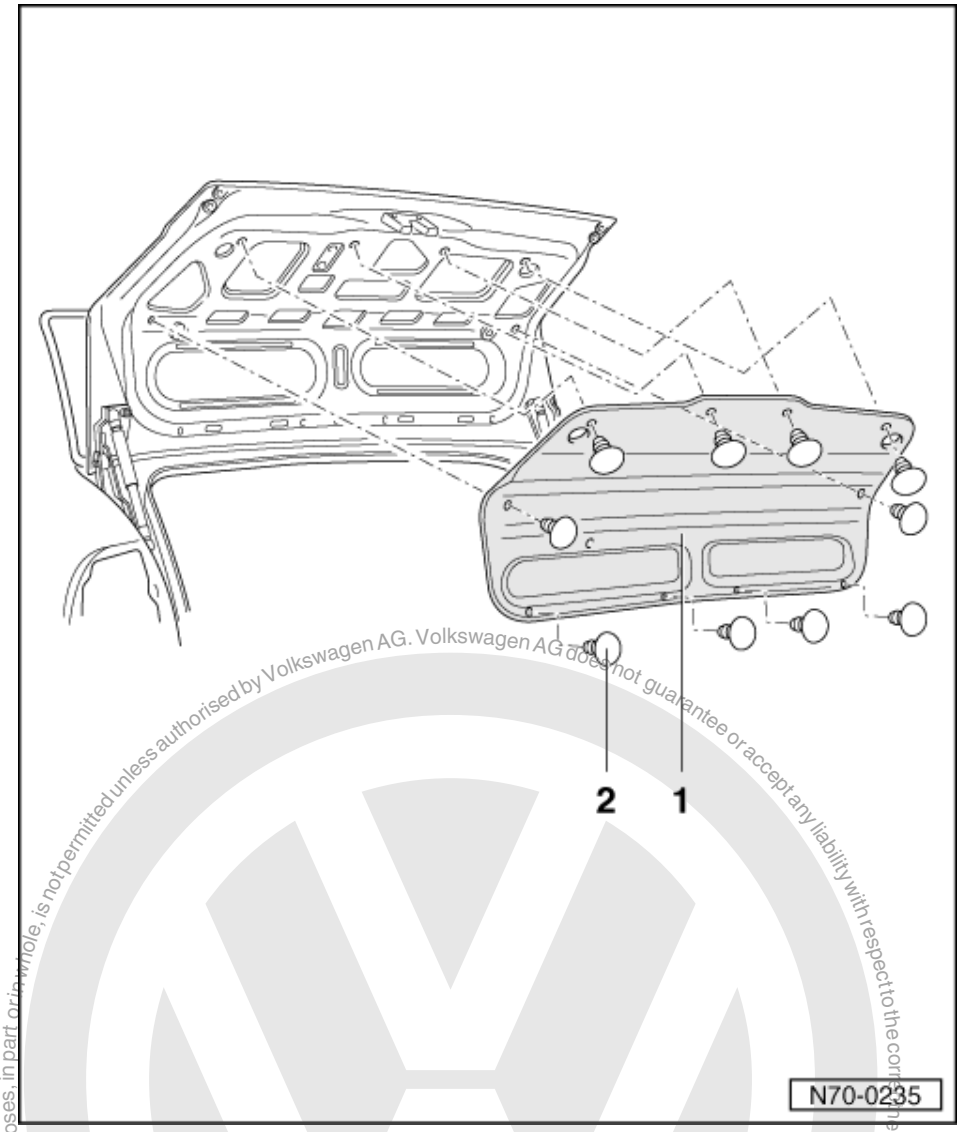

4.2 - Removing and installing boot lid trim (Polo Classic)

1 Trim
2 Plug
- Lever out with special tool 80-200

Protected by copyright. Copying for private or commercial purposes, in part or in whole, is not permitted unless authorised by Volkswagen AG. Volkswagen AG does not guarantee or accept any liability with respect to the correctness of information in this document. Copyright by Volkswagen AG.

satelettronica

4.3 - Removing and installing tailgate trim (Polo Estate)

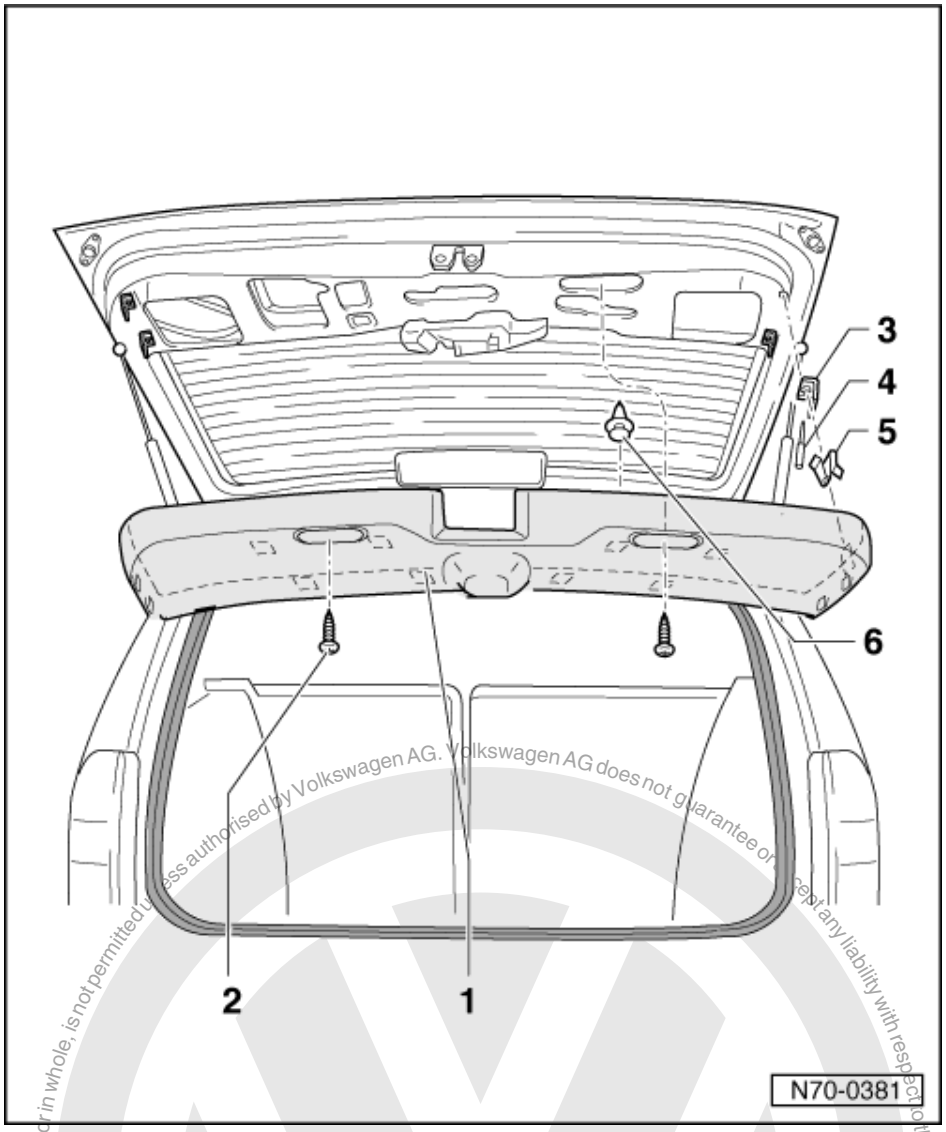

1 Trim
- Removing:
  - Remove cross-head screws - 2 -.
  - Unclip trim.

2 Cross-head screw

3 Retaining bracket
- Push spreader pin out to remove

4 Spreader pin

5 Clip
- Ensure clips are seated correctly in trim before installing trim

6 Clip
- Pushed into trim mounting

Protected by copyright. Copying for private or commercial purposes, in part or in whole, is not permitted unless authorised by Volkswagen AG. Volkswagen AG does not guarantee or accept any liability with respect to the correctness of information in this document. Copyright by Volkswagen AG.
satelettronica

5 - Load area/luggage compartment trim

5.1 - Load area/luggage compartment trim

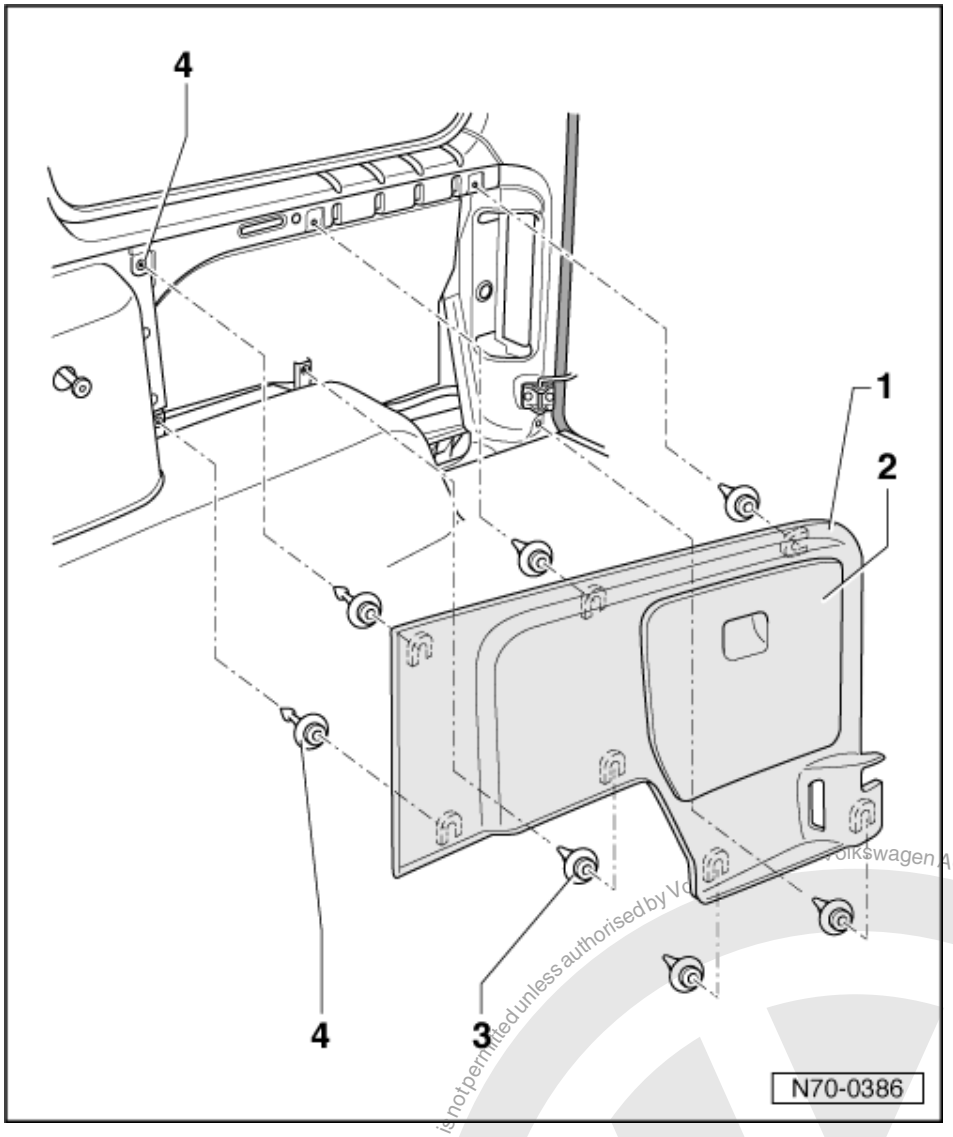

5.2 - Removing and installing - load area trim (Caddy)

1 Trim
- ◆ Removing:
- Pull trim straight off side panel.
- ◆ Installing:
- Check seating and condition of clips - 3 - and - 4 -, and correct or renew if necessary.

2 Cover
- ◆ With retainer for wheel nut wrench

3 Clip

4 Clip
- ◆ Two-piece
- ◆ Mounting fits into hole in body

satelettronica
Protected by copyright. Copying for private or commercial purposes, in part or in whole, is not permitted unless authorised by Volkswagen AG. Volkswagen AG does not guarantee or accept any liability with respect to the correctness of information in this document. Copyright by Volkswagen AG.

5.3 - Removing and installing luggage compartment floor trim (Polo Classic)

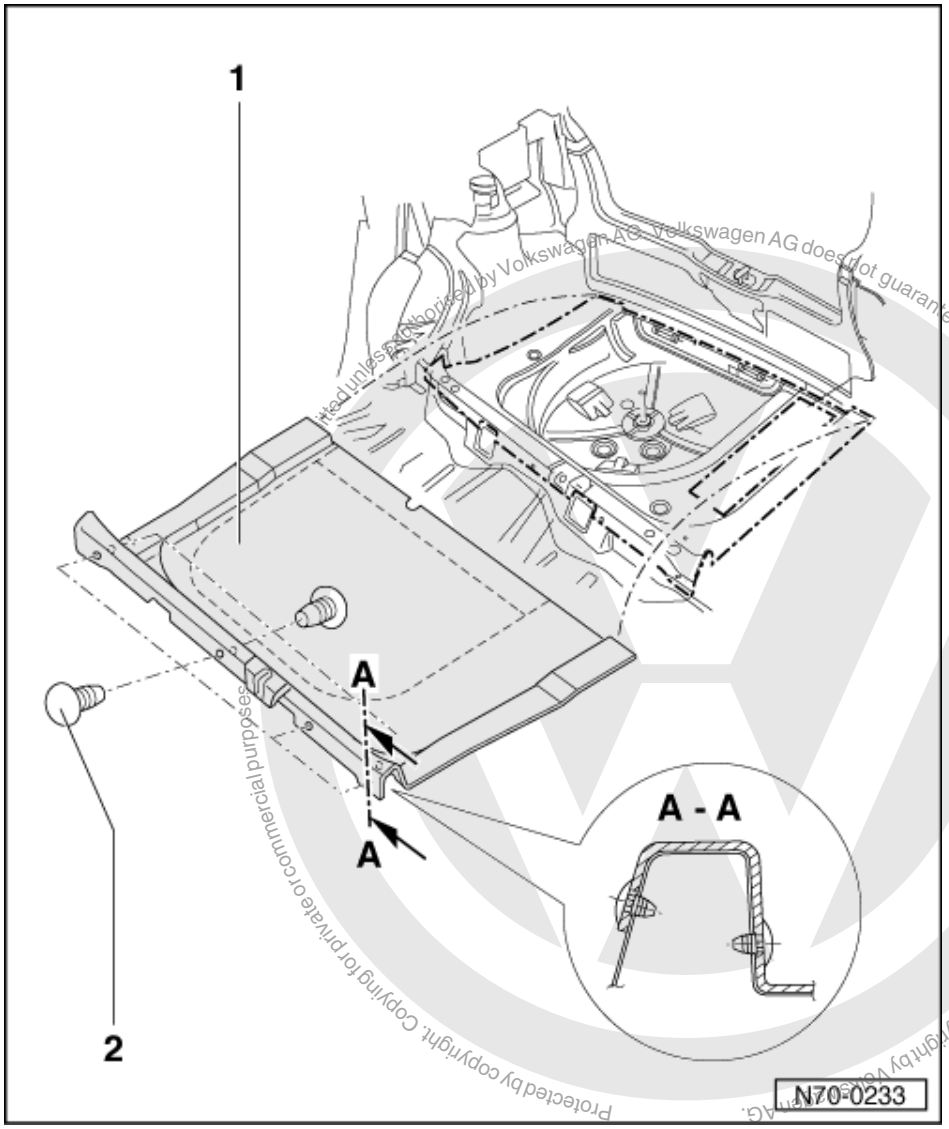

Protected by copyright. Copying for private or commercial purposes, in part or in whole, is not permitted unless authorised by Volkswagen AG. Volkswagen AG does not guarantee or accept any liability with respect to the correctness of information in this document. Copyright by Volkswagen AG.

satelettronica

1 Luggage compartment floor trim

- Removing:
- Fold rear seat up, lever out plugs - 2 - and take trim out rearwards.

2 Plug

- Lever out with special tool 80-200

5.4 - Removing and installing luggage compartment side trim (Polo Classic)

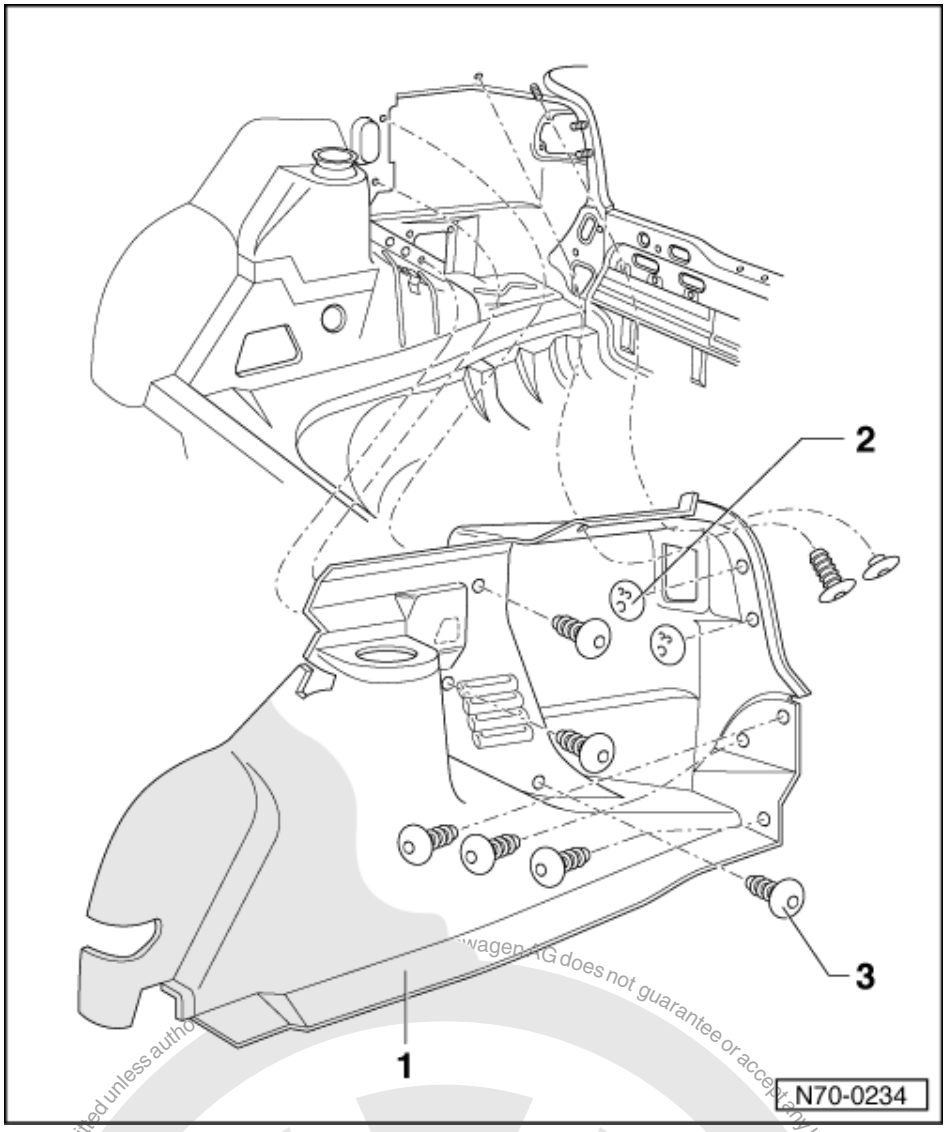

1 Trim

- Removing:
  Remove lock carrier cover => Page 136 .
- Release backrest and fold forwards. if necessary fold seat up.
- Release C pillar lower trim in rear area => Page 122 .
- Lever out plug - 3 -.
- Unscrew press button - 2 -.
- Loosen or remove rear seat belt inertia reel => Page 43 .
- Take off trim.

Protected by copyright. Copying for private or commercial purposes, in part or in whole, is not permitted unless authorised by Volkswagen AG. Copyright by Volkswagen AG. Volkswagen AG does not guarantee or accept any liability with respect to the correctness of information in this document.
satelettronica

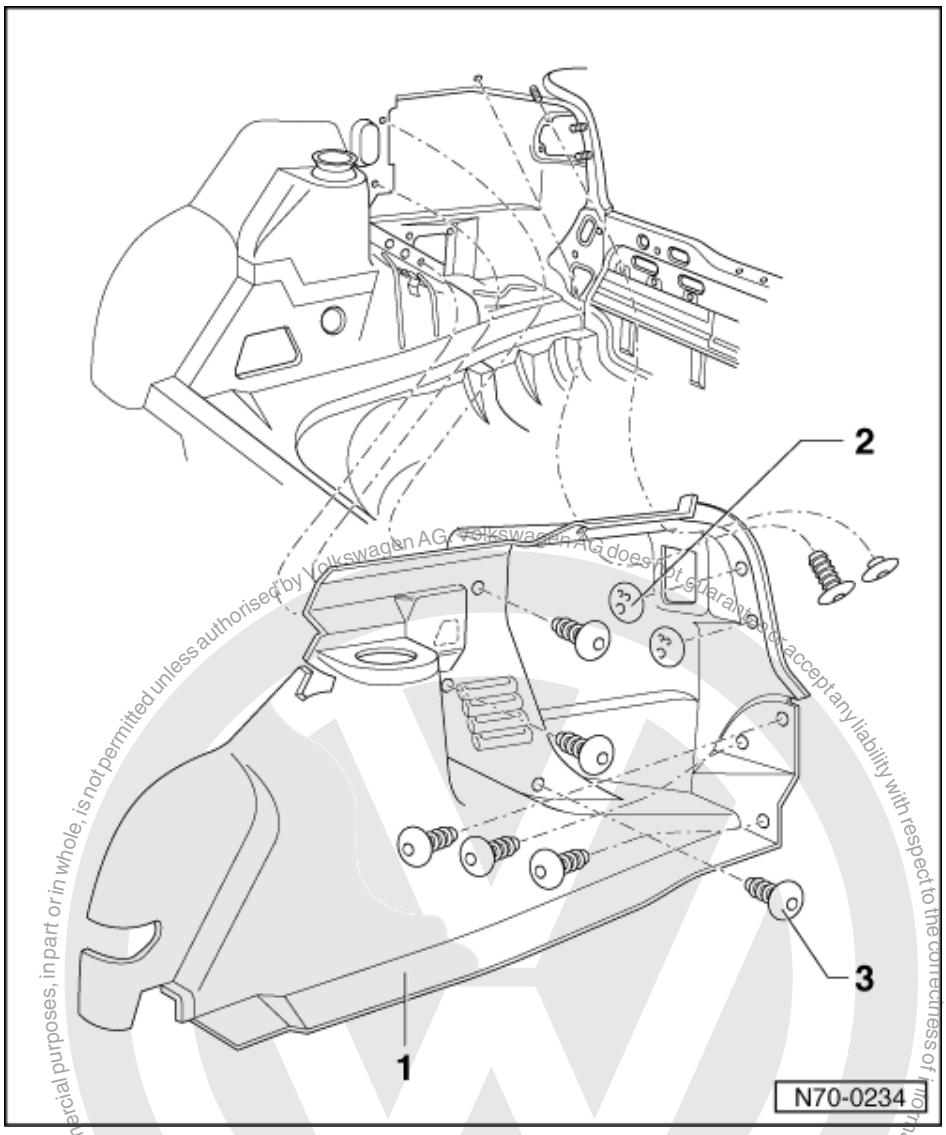

2 Press button
- Removing:
- Unscrew press button from stud.
- Installing:
- Press press button onto stud.

3 Plug
- Lever out with special tool 80-200

Protected by copyright. Copying for private or commercial purposes, in part or in whole, is not permitted unless authorised by Volkswagen AG. Volkswagen AG does not guarantee or accept any liability with respect to the correctness of information in this document. Copyright by Volkswagen AG.

satelettronica

5.5 - Removing and installing rear lock carrier cover (Polo Classic)

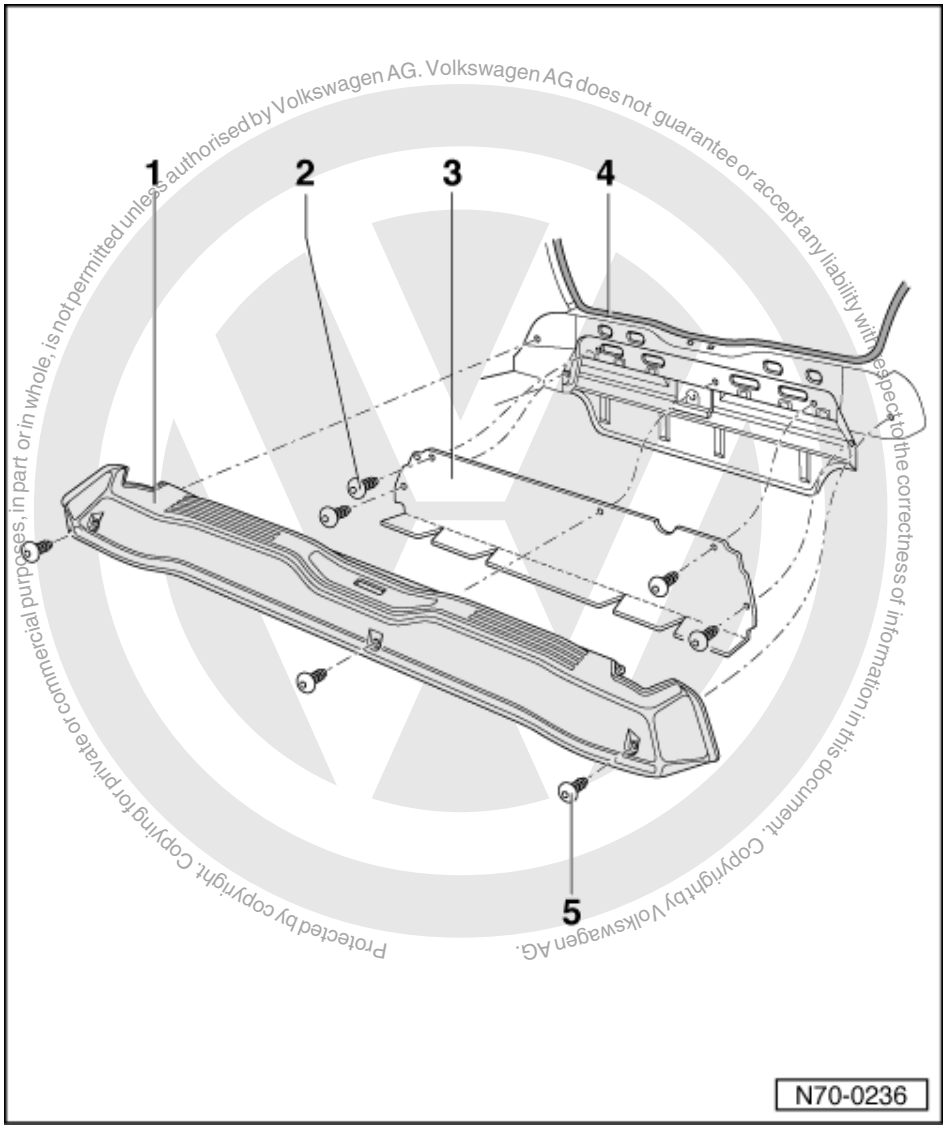

Protected by copyright. Copying for private or commercial purposes, in part or in whole, is not permitted unless authorised by Volkswagen AG. Volkswagen AG does not guarantee or accept any liability with respect to the correctness of information in this document. Copyright by Volkswagen AG.

1 Lock carrier cover

- ◆ Removing:
- Lever out plug - 5 -.
- Take cover off lock carrier.

2 Plug

- ◆ Lever out with special tool 80-200

3 Trim

- ◆ Removing:
- Remove lock carrier cover - 1 -.
- Lever out plug - 2 -.
- Take off trim.

satelettronica

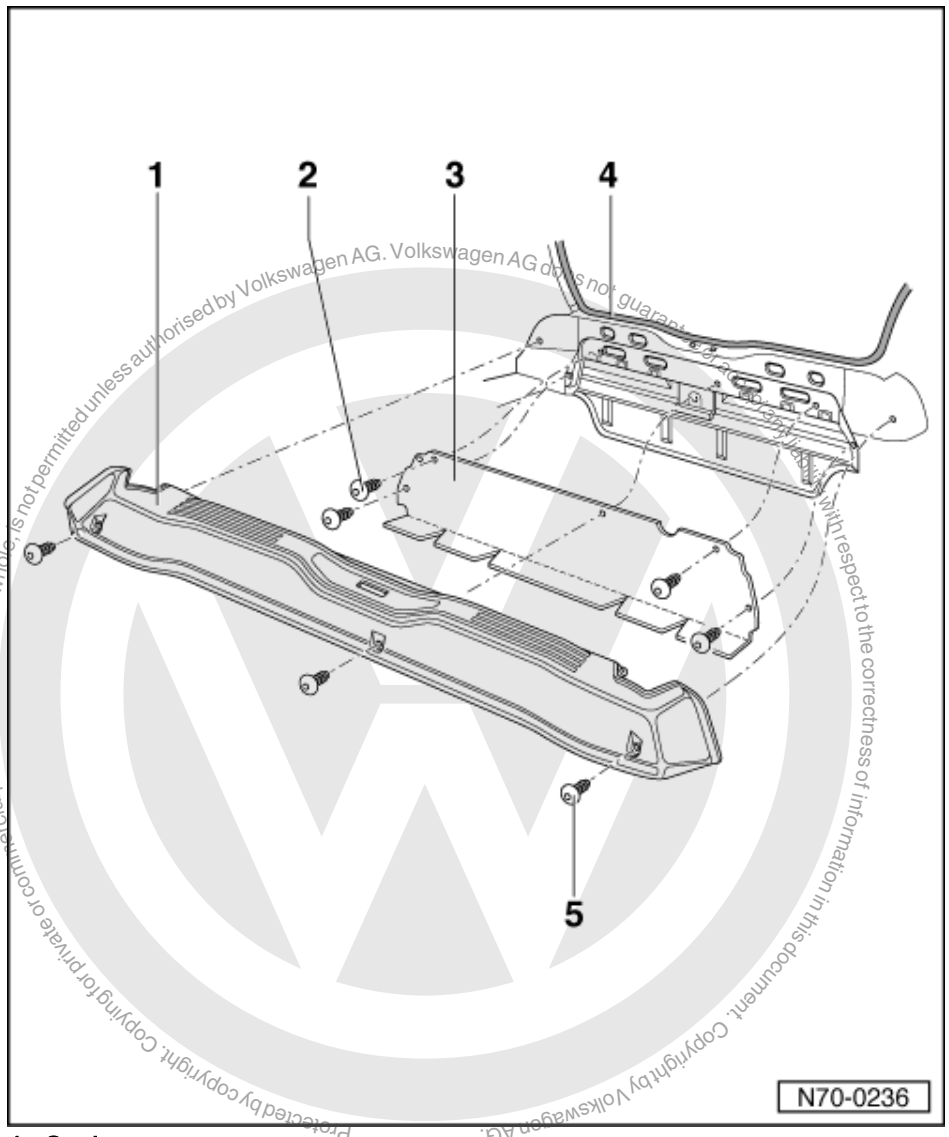

Protected by copyright. Copyright by Volkswagen AG.
Copyright by Volkswagen AG. Volkswagen AG does not guarantee or accept any liability with respect to the correctness of information in this document. Copying for private or commercial purposes, in part or in whole, is not permitted unless authorised by Volkswagen AG.

4 Seal
- After installing cover ensure seal is seated correctly

5 Plug
- Lever out with special tool 80-200

satelettronica

5.6 - Removing and installing rear shelf (Polo Classic)

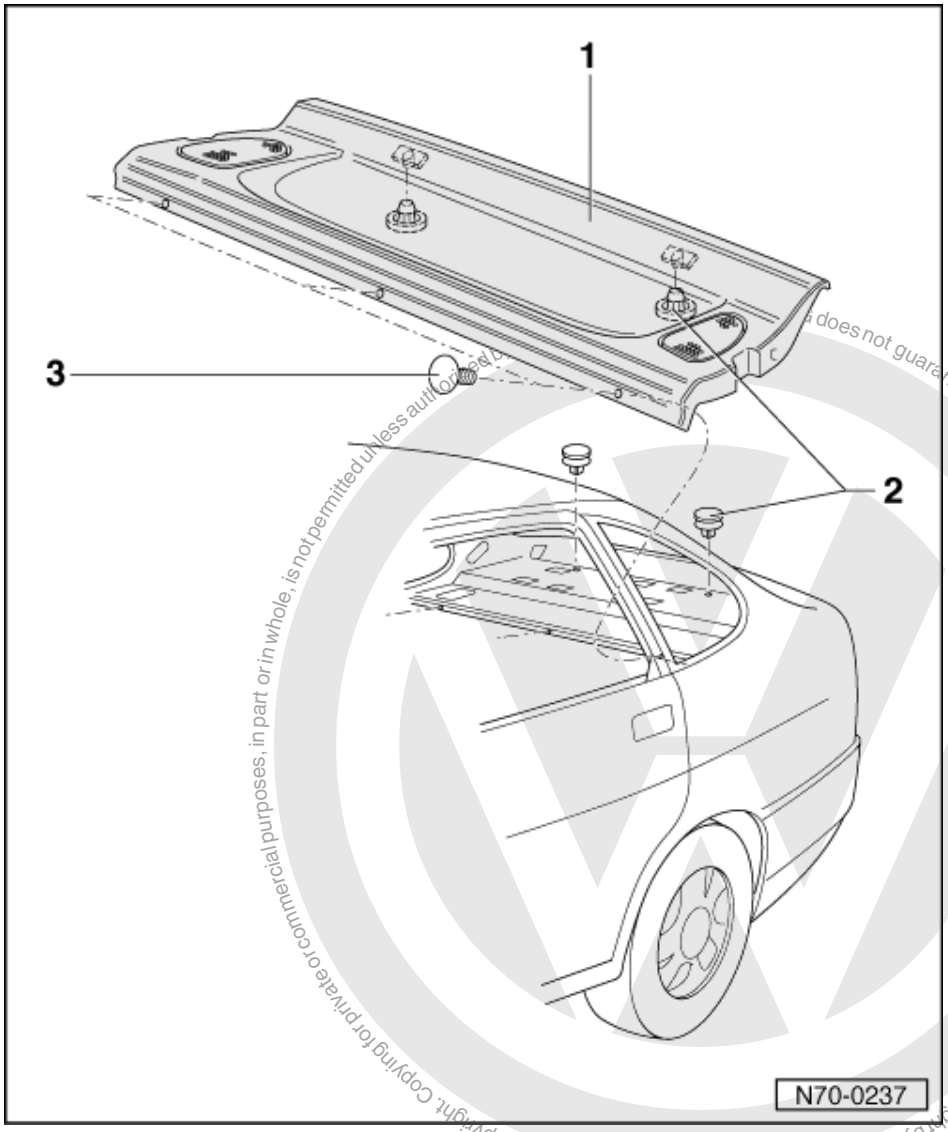

Protected by copyright. Copying for private or commercial purposes, in part or in whole, is not permitted unless authorised by Volkswagen AG. Copyright by Volkswagen AG. does not guarantee or accept any liability with respect to the correctness of information in this document.

satelettronica

1 Trim
- Removing:
- Lever out plug - 3 -.
- Lift trim up slightly and press off in area of clips - 2 -.
- Pull off front trim forwards.

2 Trim clip
- Two-part
- Remove lower part with pliers 3392

3 Plug
- Lever out with special tool 80-200

5.7 - Removing and installing rear lock carrier cover (Polo Estate)

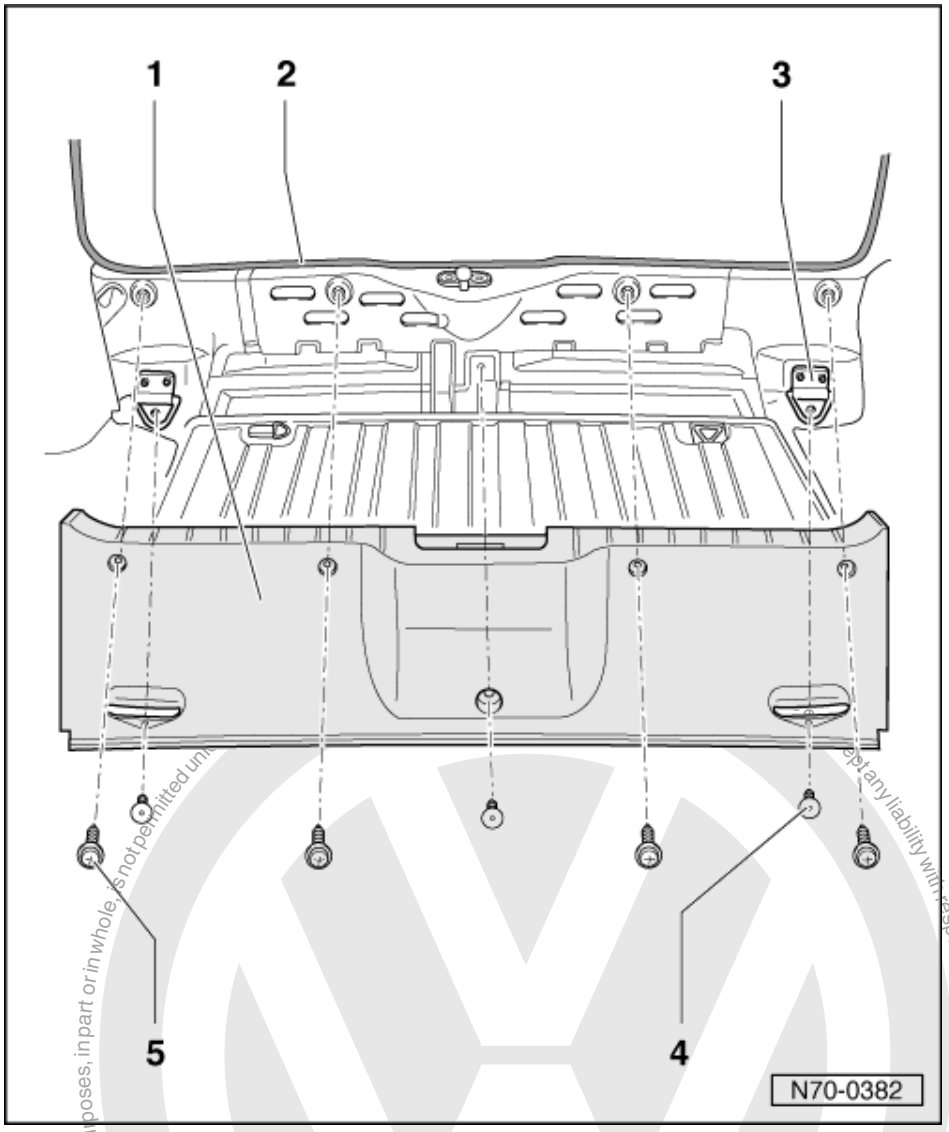

1 Lock carrier cover
- ◆ Removing:
- Remove cross-head screws - 5 -.
- Lever out plug - 4 -.
- Take cover off lock carrier.

2 Seal
- ◆ After installing cover ensure seal is seated correctly

3 Lashing eye
- ◆ Guide through cover slots when installing cover

4 Plug
- ◆ Lever out with special tool 80-200

5 Cross-head screw

Protected by copyright. Copyright by Volkswagen AG.
Copyright by Volkswagen AG. Copying for private or commercial purposes, in part or in whole, is not permitted unless authorised by Volkswagen AG. Volkswagen AG does not guarantee or accept any liability with respect to the correctness of information in this document.
satelettronica

5.8 - Removing and installing load area side panel trim (Polo Estate)

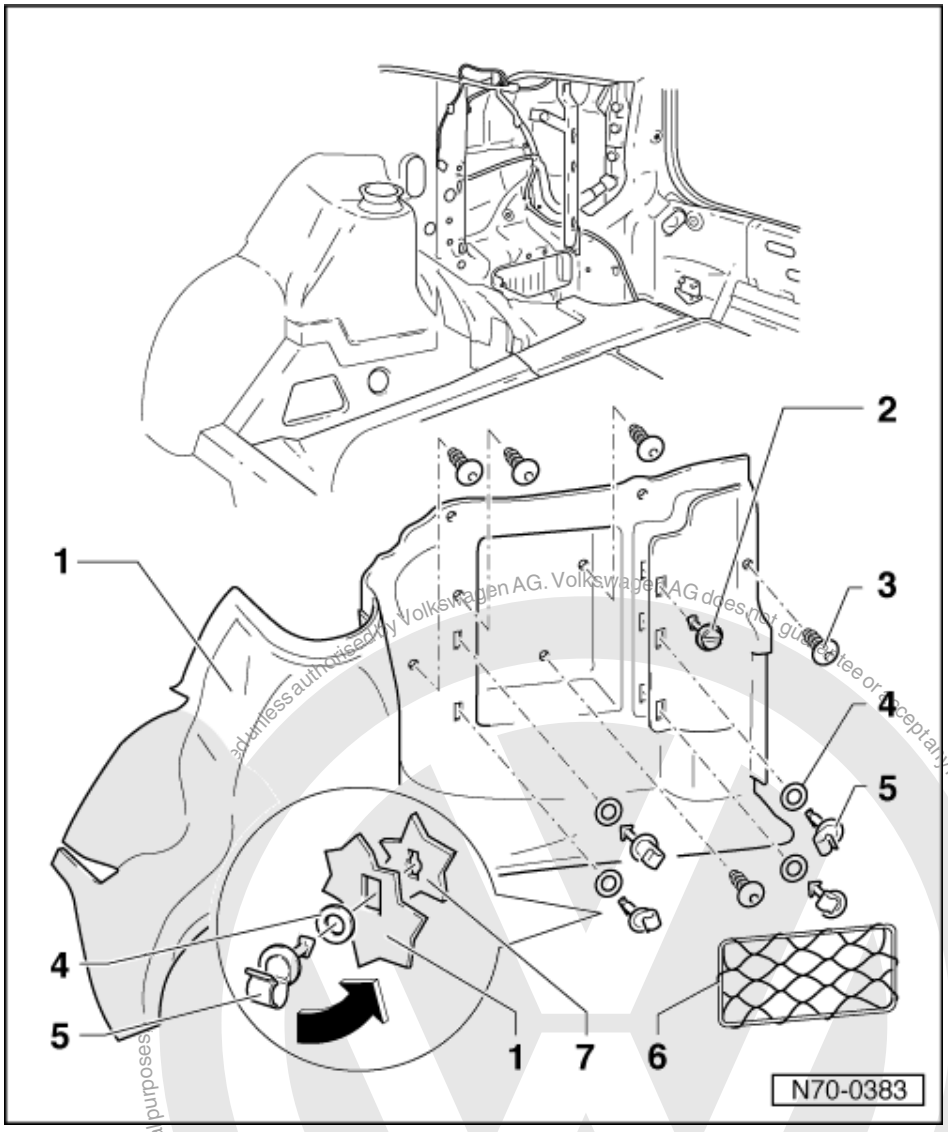

1 Trim

- ◆ Removing:
- Remove load area cover => Page 26 .
- Remove lock carrier cover => Page 139 .
- Release backrest and fold forwards. if necessary fold seat up.
- Release C pillar lower trim in rear area => Page 126 .
- Remove clips - 5 - with retaining net - 6 - and clip - 2 -.
- Lever out plug - 3 -.
- Lift load area floor.
- Take off trim.

Protected by copyright. Copying for private or commercial purposes, in part or in whole, is not permitted unless authorised by Volkswagen AG. Volkswagen AG does not guarantee or accept any liability with respect to the correctness of information in this document. Copyright by Volkswagen AG.
satelettronica

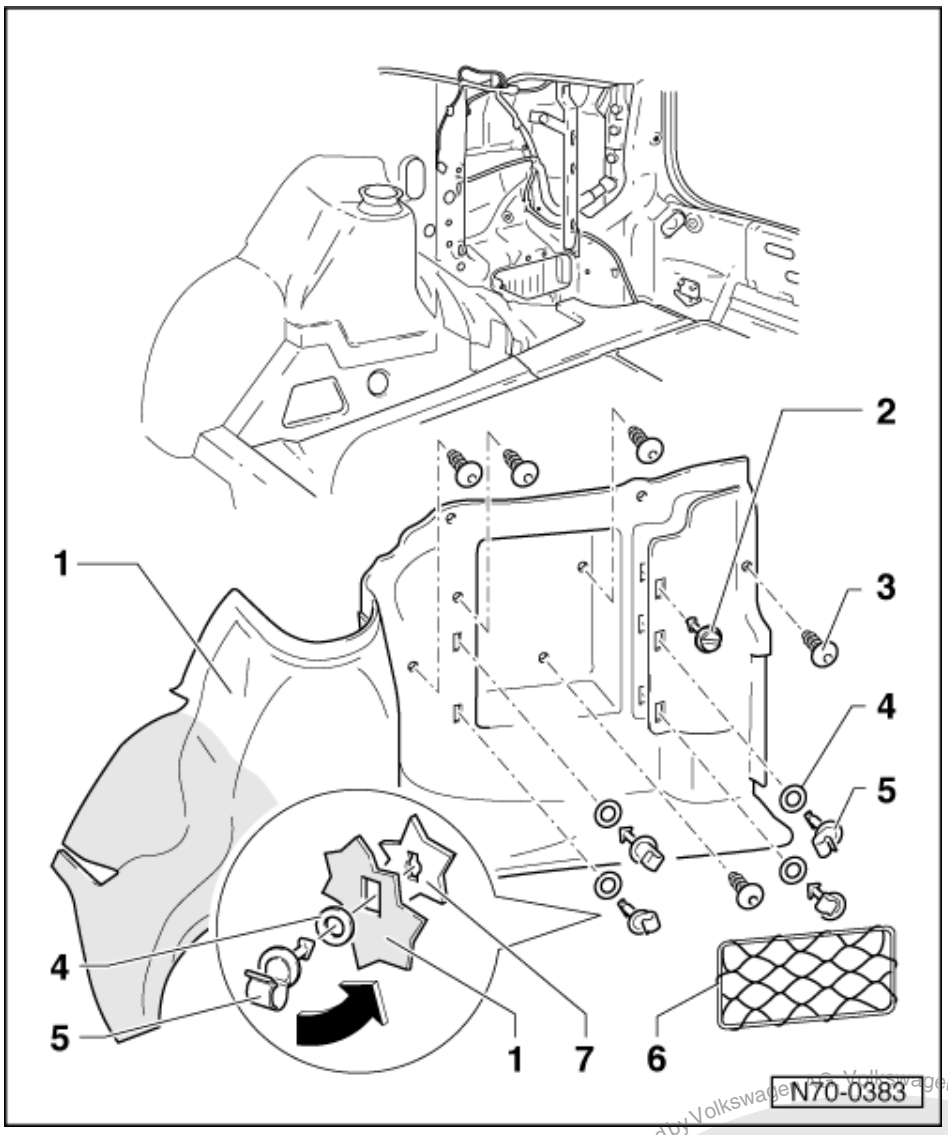

2 Clip

3 Plug

- Lever out with special tool 80-200

4 Washer

5 Clip

6 Retaining net

7 Body panel

satelettronica

Copyright by Volkswagen AG. Volkswagen AG does not guarantee or accept any liability with respect to the correctness of information in this document. Copyright by Volkswagen AG. Copying for private or commercial purposes, in part or in whole, is not permitted unless authorised by Volkswagen AG.

6 - Roof trim

6.1 - Roof trim

6.2 - Removing and installing front moulded headlining (Caddy)

Removing

- Disconnect battery earth strap at battery.
- Remove front seat belt relay fitting => Page 36 .
- Pull off B pillar upper trim carefully at top only => Page 112 .
- Remove A pillar trim => Page 110 .
- Remove rear moulded headlining => Page 144 .

Note:

If the B pillar upper trim has been removed completely in conjunction with other sequent work then there is no requirement to remove the rear moulded headliner in order to remove the front moulded headliner.

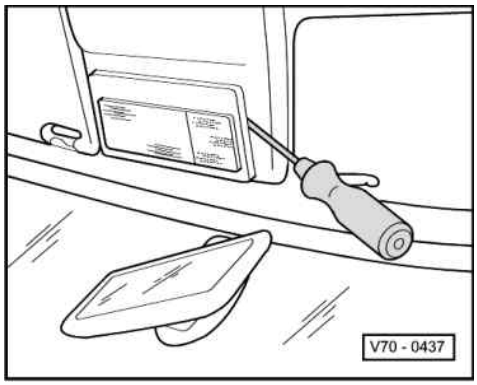

- -> Lever out interior light with a screwdriver and separate connectors.

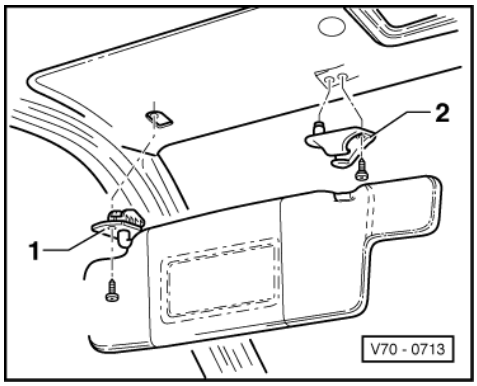

- -> Remove sun visor -1- and sun visor mounting -2- screws (turn sun visor mounting through 90° to remove) and separate connector for mirror illumination.

Protected by copyright. Copying for private or commercial purposes, in part or in whole, is not permitted unless authorised by Volkswagen AG. Volkswagen AG does not guarantee or accept any liability with respect to the correctness of information in this document. Copyright by Volkswagen AG.
satelettronica

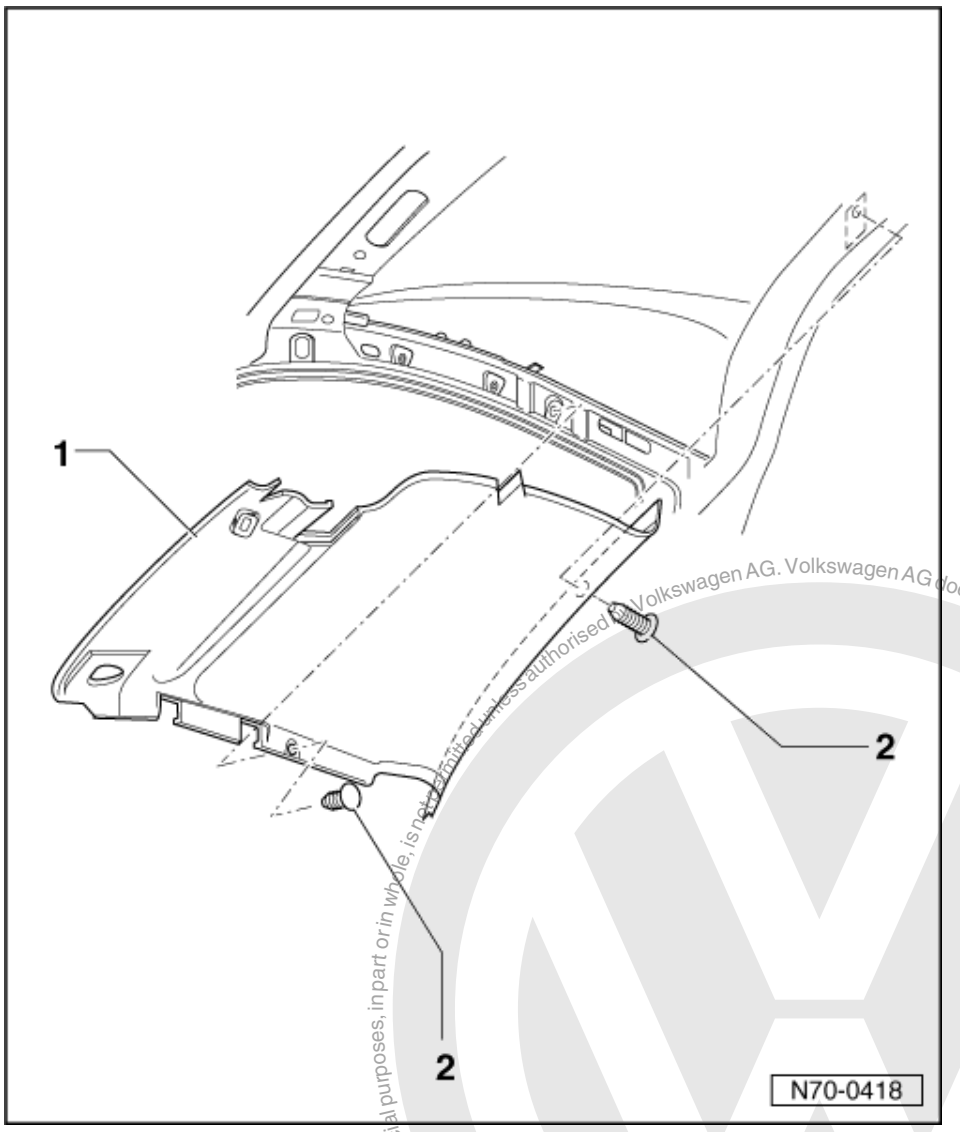

- Remove plugs -2- with pliers 3392.
- Lower front moulded headliner -1- and remove from vehicle.

Installing

- Align front moulded headliner -1- at front with sun visor mountings and at sides with holes for plugs -2-.
- Press in plugs -2-.
- Secure moulded headliner at front with sun visor mountings.
- Fit on attachments.

Protected by copyright. Copying for private or commercial purposes, in part or in whole, is not permitted unless authorised by Volkswagen AG. Volkswagen AG does not guarantee or accept any liability with respect to the correctness of information in this document. Copyright by Volkswagen AG.
satelettronica

6.3 - Removing and installing rear moulded headlining (Caddy)

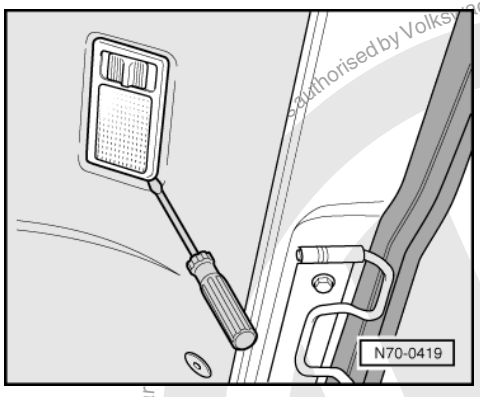

Removing

- Disconnect battery earth strap at battery.
- -> Lever out interior light with a screwdriver and separate connectors.

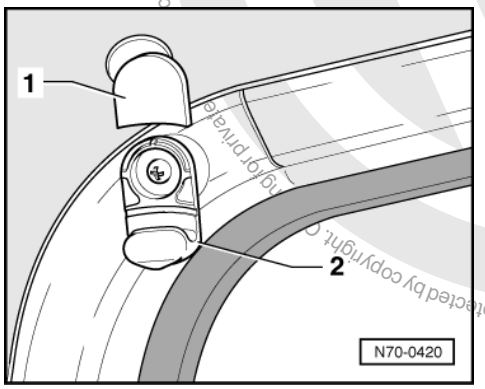

- -> Lever cover cap off coat hook on left and right-hand sides and unscrew coat hooks -2-.
- Unscrew front seat belt relay fitting on left and right-hand sides => Page 36 .
- Pull off B pillar upper trim carefully at top only => Page 112 .

Authorised by Volkswagen AG. Volkswagen AG does not guarantee or accept any liability with respect to the correctness of information in this document. Copyright by Volkswagen AG.
Protected by copyright. Copying for private and commercial purposes, in part
satelettronica

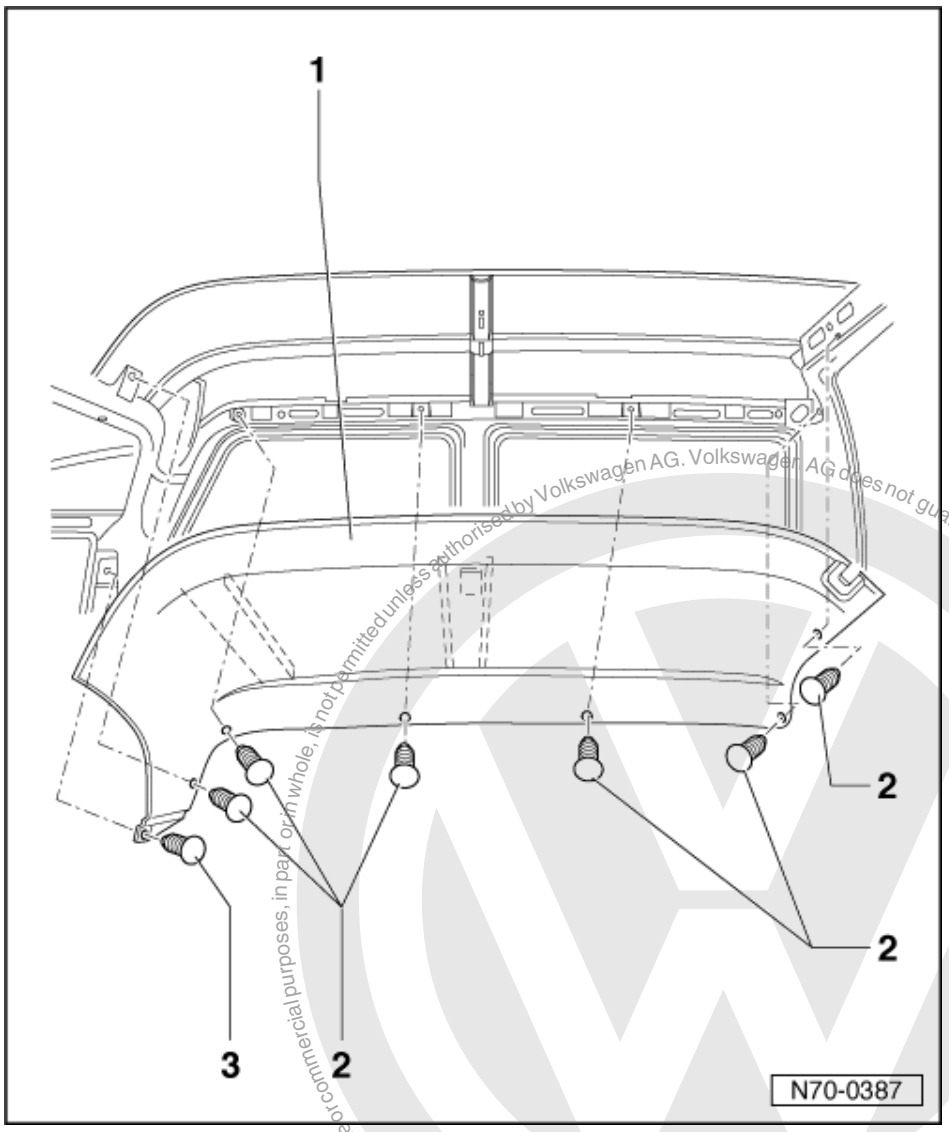

- Remove plugs -2- and -3- with pliers 3392.

Note:

The plugs -3- (left and right) are covered by the B pillar upper trim.

- Lower moulded headliner -1- with the aid of a 2nd mechanic (danger of breakage) and remove from vehicle.

Installing

- Align moulded headliner -1- according to holes for plugs -2- and -3-.
- Press in plugs -2- and -3-.
- Fit on attachments.

6.4 - Removing and installing moulded headliner (Polo Classic, Polo Estate)

Removing

- Disconnect battery earth strap at battery.
- Remove B pillar upper trim => Page 116 .
- Remove A pillar trim => Page 110 .
- Remove C and D pillar upper trim => Page 119 (Polo Classic).
- Remove C pillar upper trim => Page 124 (Polo Estate).

Protected by copyright. Copyright by Volkswagen AG.
Copyright by Volkswagen AG. Volkswagen AG does not guarantee or accept any liability with respect to the correctness of information in this document. Copying for private or commercial purposes, in part or in whole, is not permitted unless authorised by Volkswagen AG.
satelettronica

- Remove D pillar upper trim => Page 128 (Polo Estate).

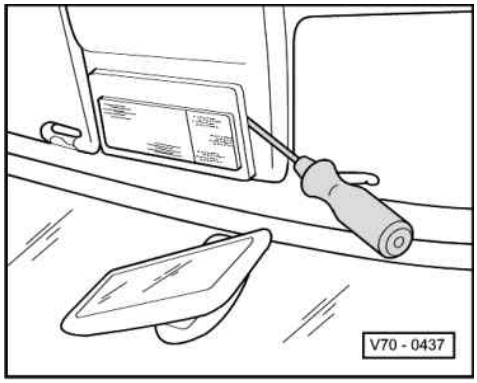

- -> Lever out front and rear interior light (Polo Estate only) with a screwdriver and separate connectors.

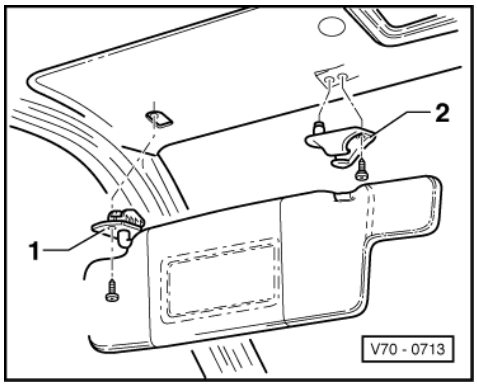

- -> Remove sun visor -1- and sun visor mounting -2- screws (turn sun visor mounting through 90° to remove) and separate connector for mirror illumination.

Protected by copyright. Copying for private or commercial purposes, in part or in whole, is not permitted unless authorised by Volkswagen AG. Volkswagen AG does not guarantee or accept any liability with respect to the correctness of information in this document. Copyright by Volkswagen AG.

satelettronica

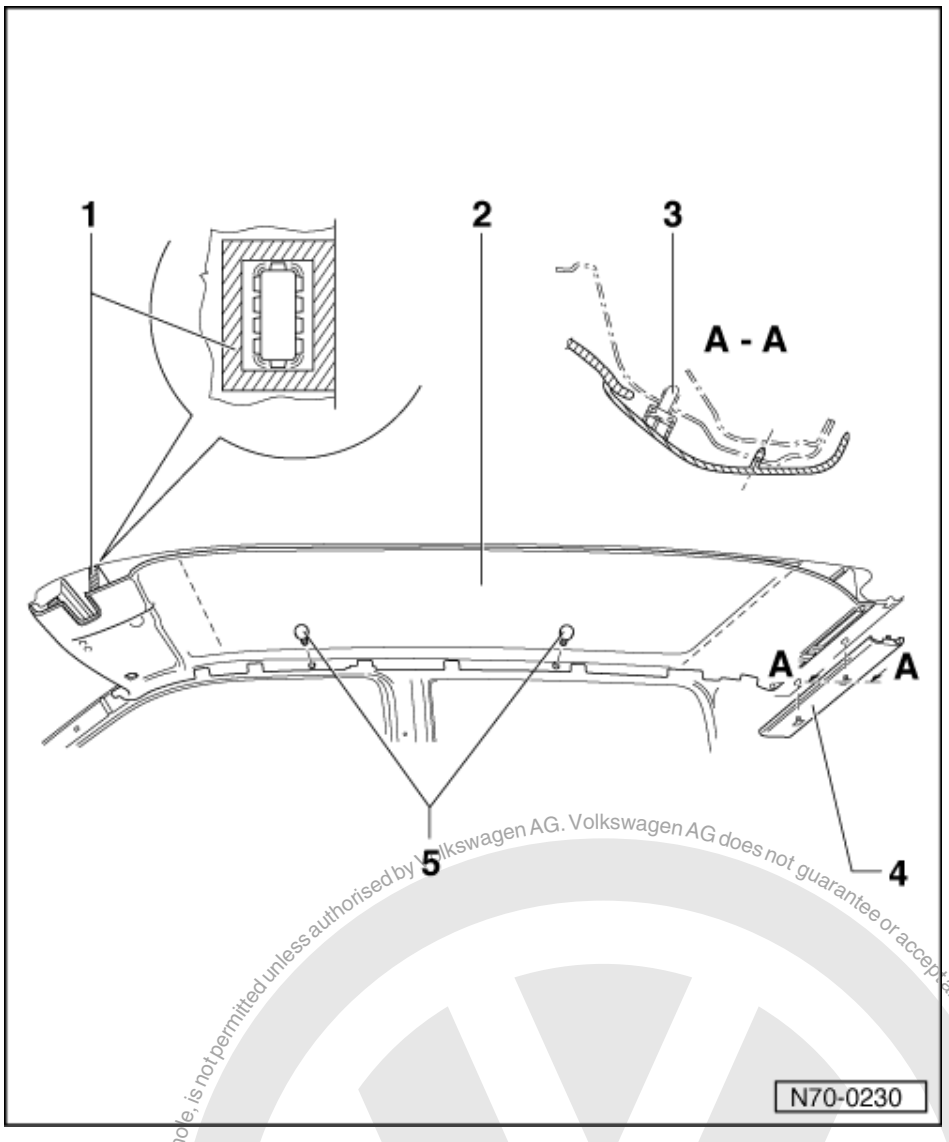

Polo Classic

- Pull end strip -4- (clipped on) downwards off roof frame.
- Remove plugs -5- with pliers 3392.
- Lower moulded headliner -2- with the aid of a 2nd mechanic (danger of breakage) and remove from vehicle.

Protected by copyright. Copying for private or commercial purposes, in part or in whole, is not permitted unless authorised by Volkswagen AG. Volkswagen AG does not guarantee or accept any liability with respect to the correctness of information in this document. Copyright by Volkswagen AG.
satelettronica

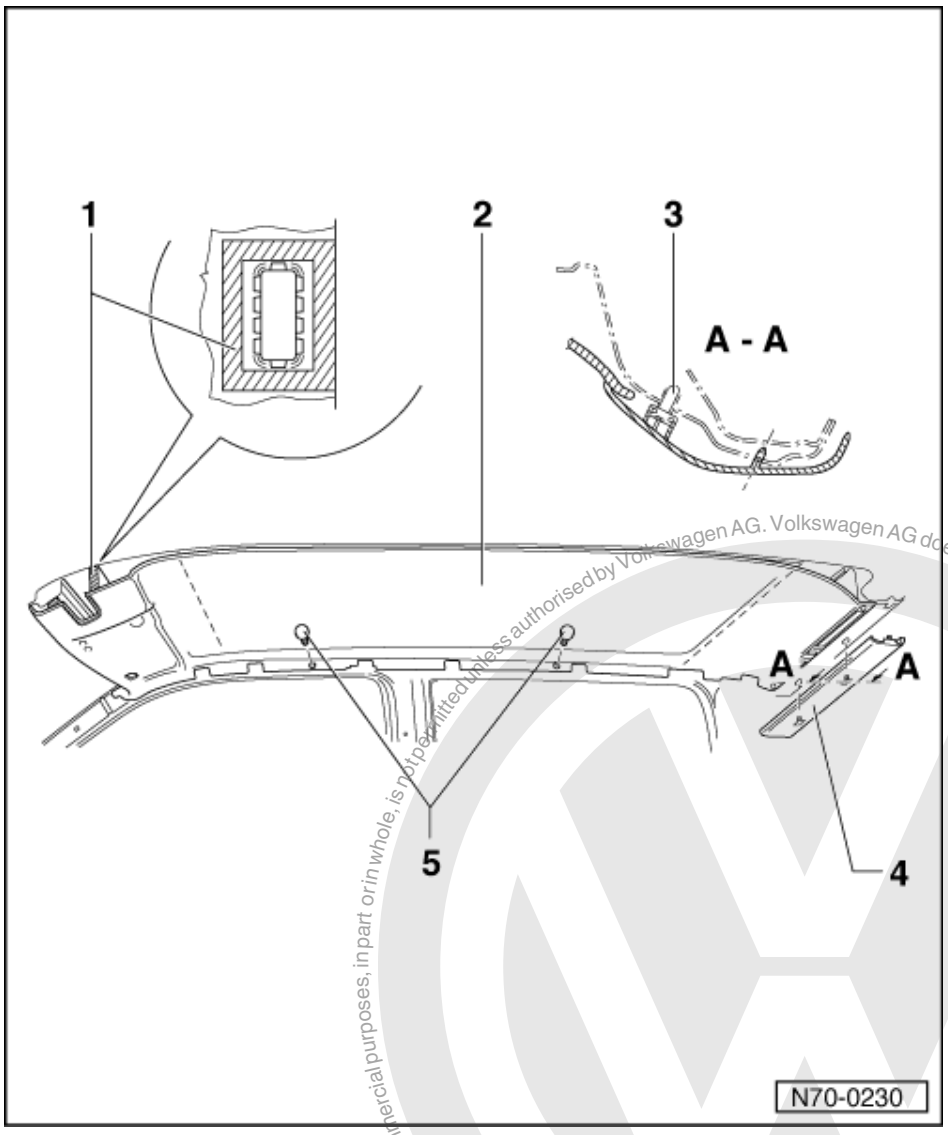

Protected by copyright. Copying for private or commercial purposes, in part or in whole, is not permitted unless authorised by Volkswagen AG. Volkswagen AG does not guarantee or accept any liability with respect to the correctness of information in this document. Copyright by Volkswagen AG.

satelettronica

Installing

Note:

- Ensure clips -3- are seated correctly before installing end strip -4-.
- Spacer -1- (self-adhesive) is stuck onto reverse side of moulded headliner.

- Align moulded headliner -2- at front with sun visor mountings and at sides with holes for plugs -5-.
- Press in plugs -5-.
- Secure moulded headliner at front with sun visor mountings.
- Press end strip -4- into roof frame.
- Fit on attachments.

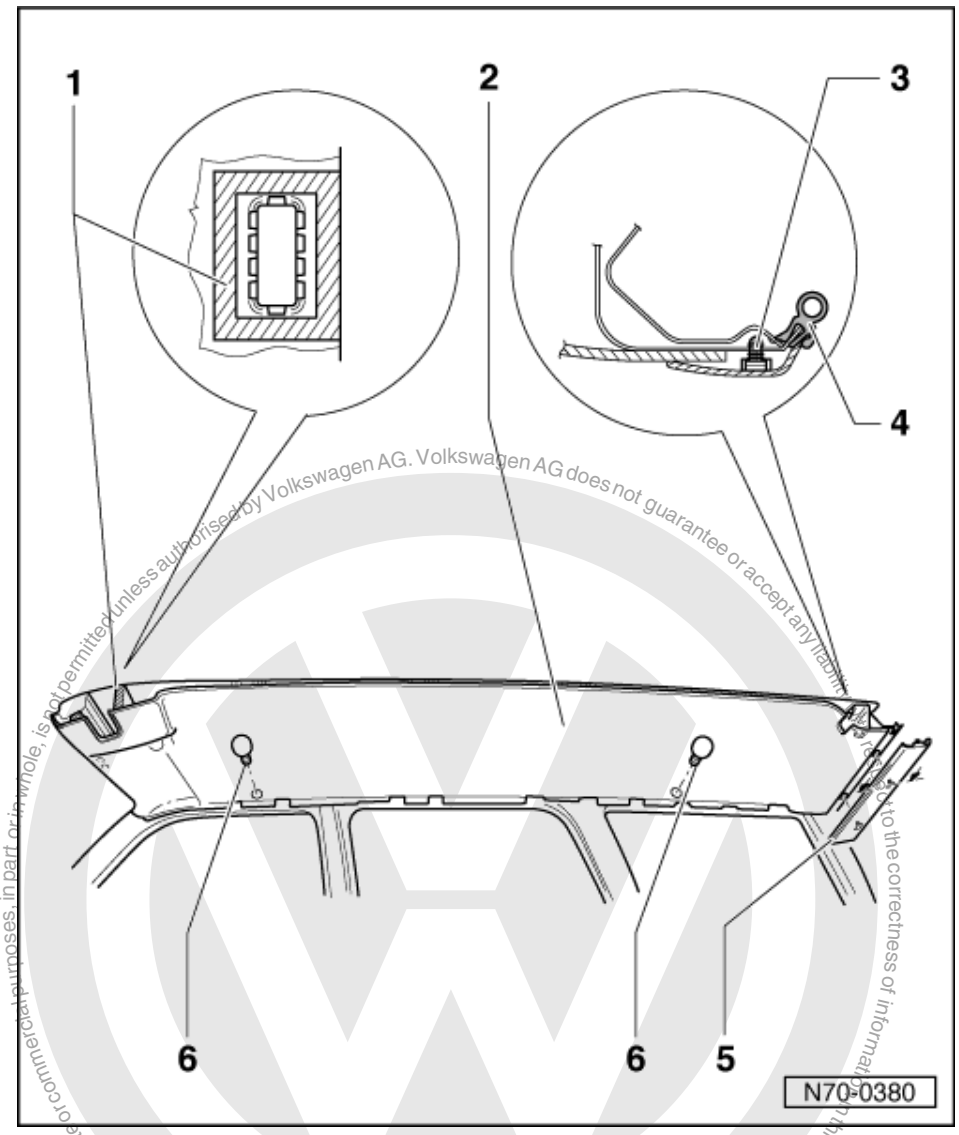

Polo Estate

- Pull end strip -5- (clipped on) downwards off roof frame.
- Remove plugs -6- with pliers 3392.
- Lower moulded headliner -2- with the aid of a 2nd mechanic (danger of breakage) and remove from vehicle.

Protected by copyright. Copying for private or commercial purposes, in part or in whole, is not permitted unless authorised by Volkswagen AG. Volkswagen AG does not guarantee or accept any liability with respect to the correctness of information in this document. Copyright by Volkswagen AG.
satelettronica

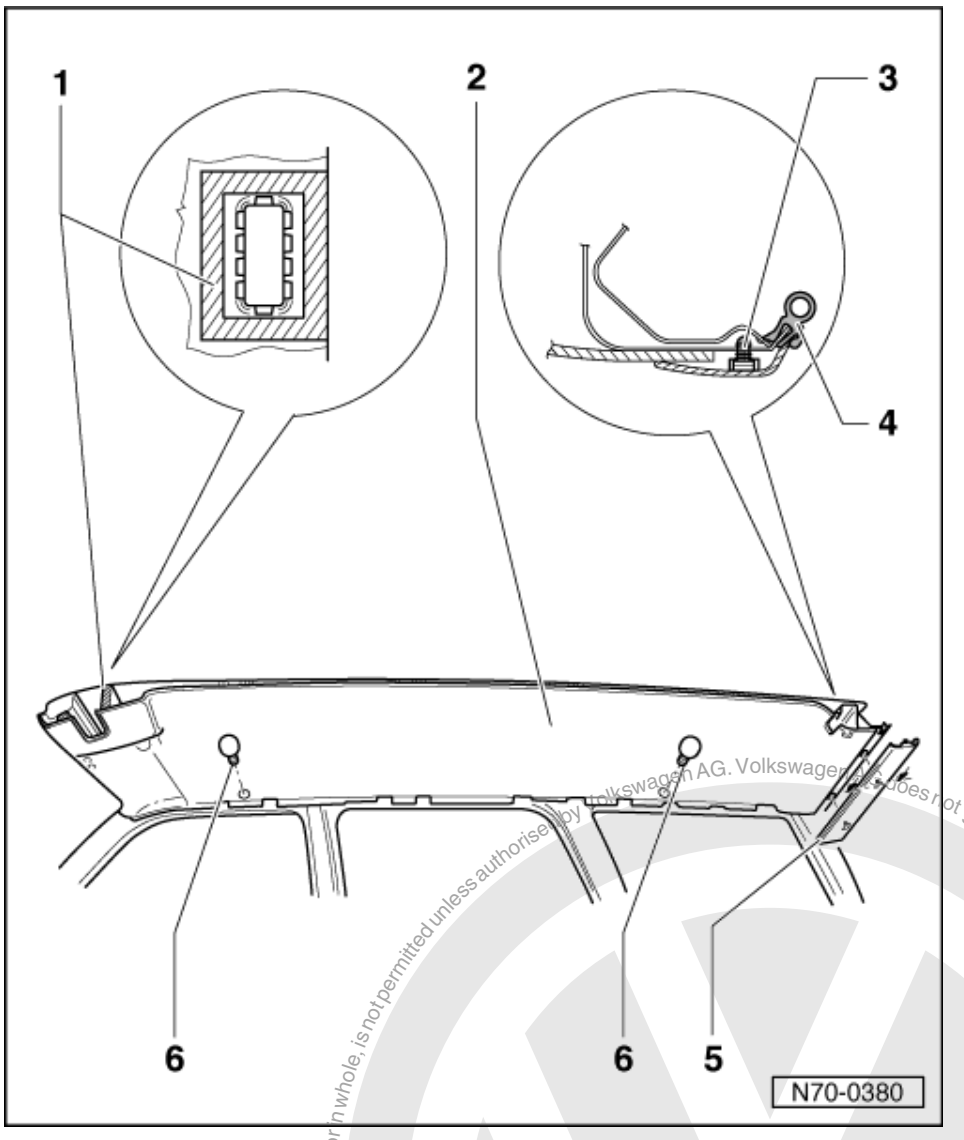

Installing

Note:

- Ensure clips -3- are seated correctly before installing end strip -5-.
- Spacer -1- (self-adhesive) is stuck onto reverse side of moulded headliner.

- Align moulded headliner -2- at front with sun visor mountings and at sides with holes for plugs -6-.
- Press in plugs -6-.
- Secure moulded headliner at front with sun visor mountings.
- Press end strip -5- into roof frame.
- Ensure seal -4- is seated correctly.
- Fit on attachments.

6.5 - Removing and installing moulded headliner with sliding/tilting sun roof (Polo Classic, Polo Estate)

Removing

- Disconnect battery earth strap at battery.
- Remove A pillar trim => Page 110 .
- Remove B pillar upper trim => Page 116 .

Protected by copyright. Copyright by Volkswagen AG. Volkswagen AG does not guarantee or accept any liability with respect to the correctness of information in this document. Copying for private or commercial purposes, in part or in whole, is not permitted unless authorised by Volkswagen AG.
satelettronica

- Remove C and D pillar upper trim => Page 119 (Polo Classic).

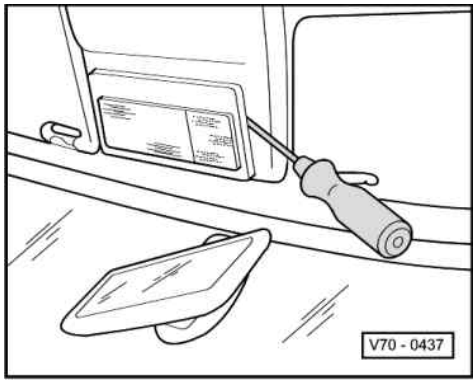

- Remove C pillar upper trim => Page 124 (Polo Estate).
- Remove D pillar upper trim => Page 128 (Polo Estate).
- -> Lever out front and rear interior light (Polo Estate only) with a screwdriver and separate connectors.

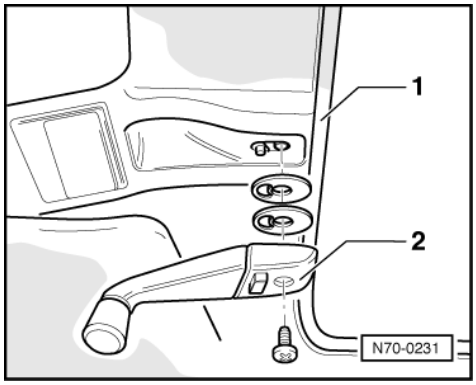

- -> Pull off weather strip -1- around edge of sliding/tilting roof opening with panel open.
- Remove crank -2-.

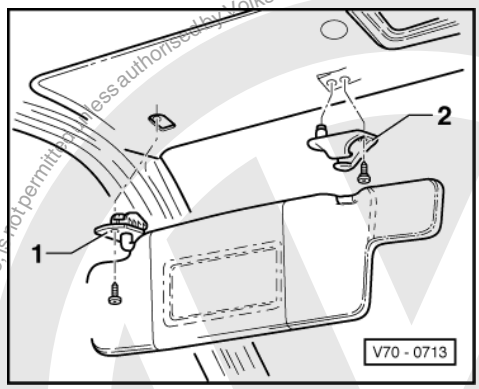

- -> Remove sun visor -1- and sun visor mounting -2- screws (turn sun visor mounting through 90° to remove) and separate connector.

Protected by copyright. Copying for private or commercial purposes, in part or in whole, is not permitted unless authorised by Volkswagen AG. Volkswagen AG does not guarantee or accept any liability with respect to the correctness of information in this document. Copyright by Volkswagen AG.

satelettronica

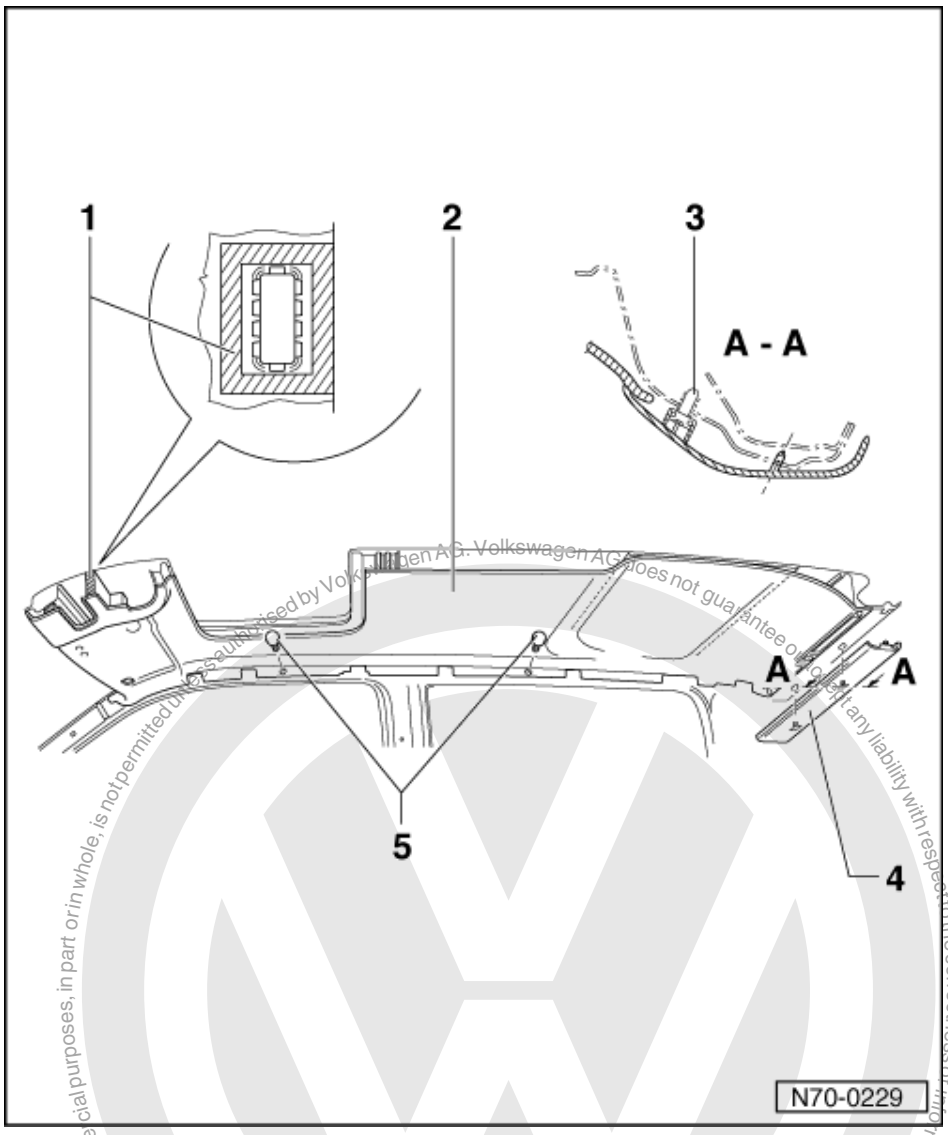

Polo Classic

- Pull end strip -4- (clipped on) downwards off roof frame.
- Remove plugs -5- with pliers 3392.
- Lower moulded headliner -2- with the aid of a 2nd mechanic (danger of breakage) and remove from vehicle.

Protected by copyright. Copyright by Volkswagen AG.
Copyright by Volkswagen AG. Volkswagen AG does not guarantee or assume any liability with respect to the correctness of information in this document. Copying for private or commercial purposes, in part or in whole, is not permitted unless authorised by Volkswagen AG.
satelettronica

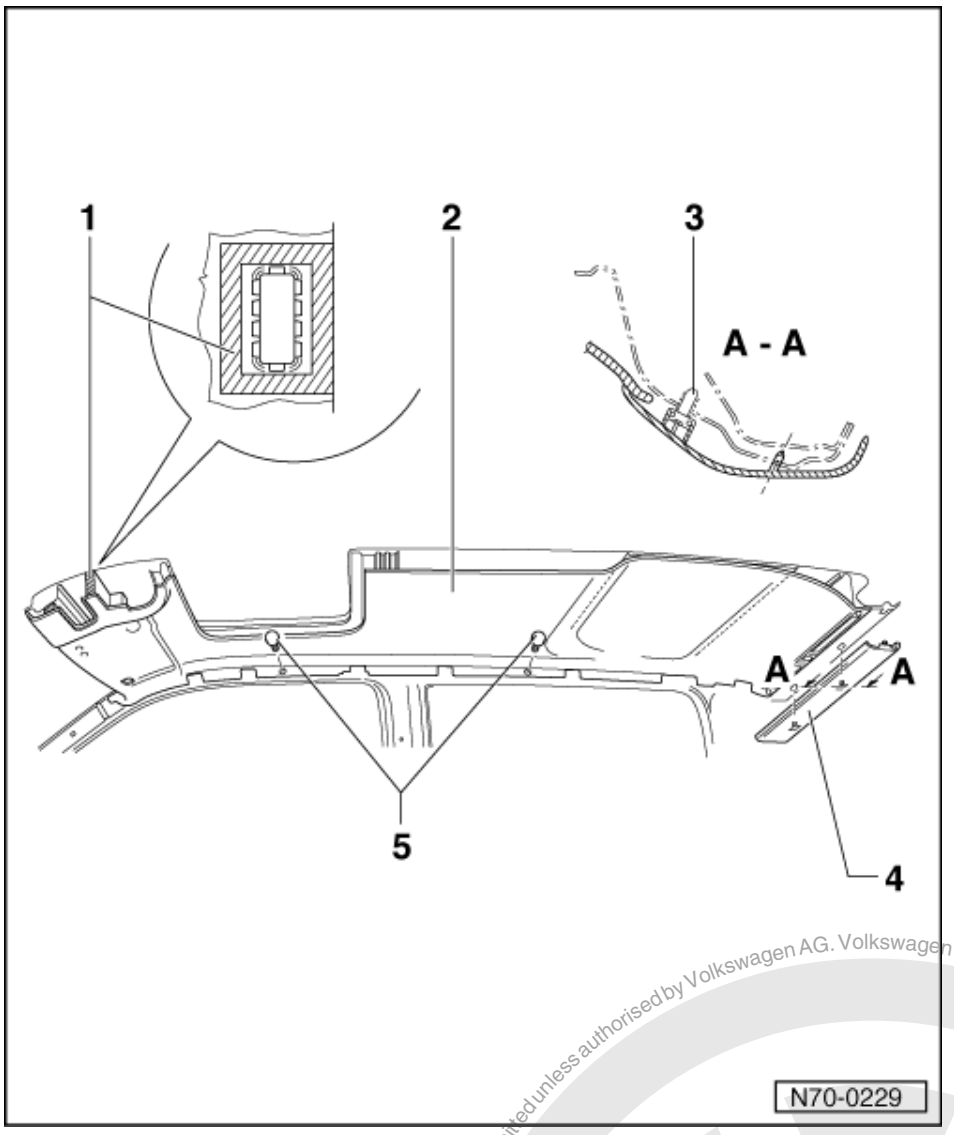

Installing

Note:

- Ensure clips -3- are seated correctly before installing end strip -4-.
- Spacer -1- (self-adhesive) is stuck onto reverse side of moulded headliner.

- Align moulded headliner -2- at front with sun visor mountings and at sides with holes for plugs -5-.
- Press in plugs -5-.
- Secure moulded headliner at front with sun visor mountings.
- Press end strip -4- into roof frame.
- Fit on attachments.

Protected by copyright. Copying for private or commercial purposes, part or whole, is not permitted unless authorised by Volkswagen AG. Volkswagen AG does not guarantee or accept any liability with respect to the correctness of information in this document. Copyright by Volkswagen AG.
satelettronica

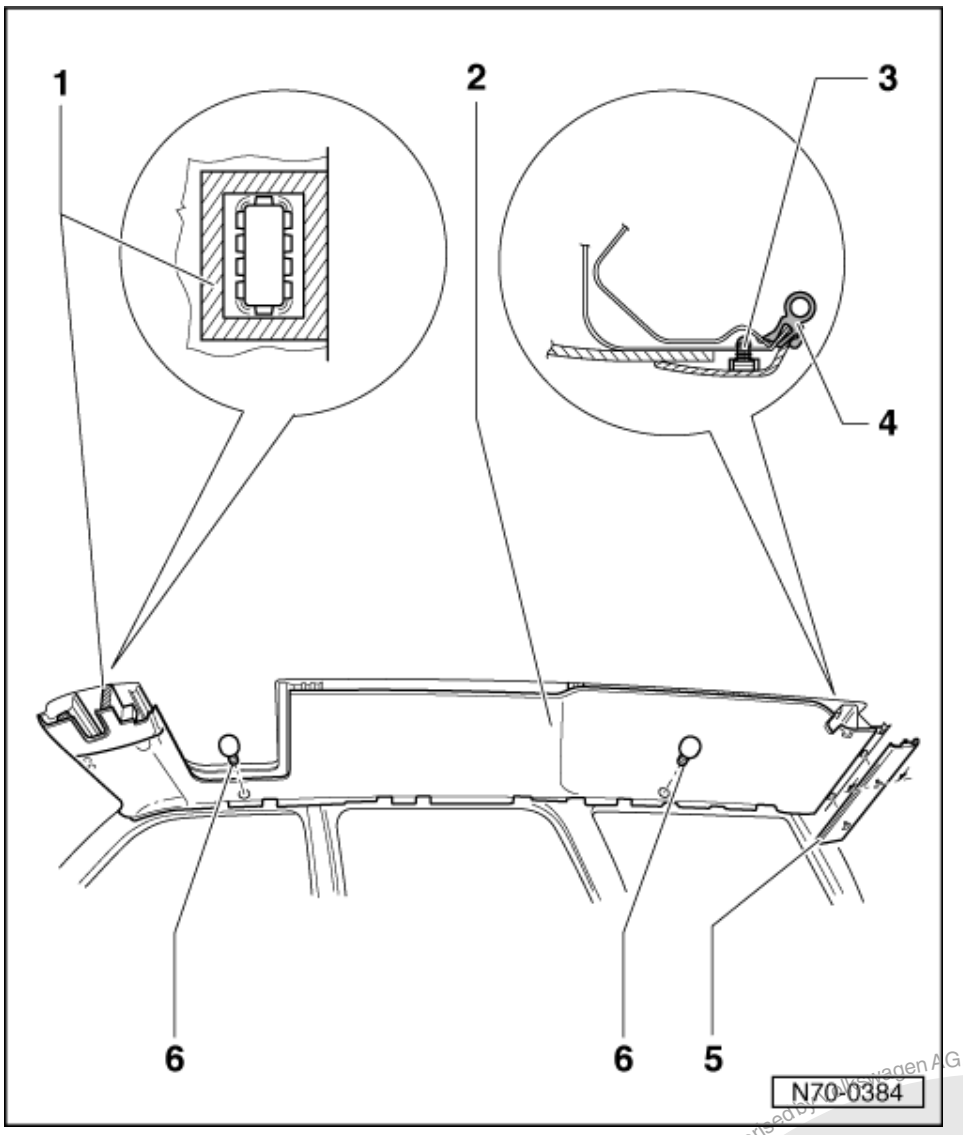

Polo Estate

- Pull end strip -5- (clipped on) downwards off roof frame.
- Remove plugs -6- with pliers 3392.
- Lower moulded headliner -2- with the aid of a 2nd mechanic (danger of breakage) and remove from vehicle.

Protected by copyright. Copying for private or commercial purposes, in part or in whole, is not permitted unless authorised by Volkswagen AG. Volkswagen AG does not guarantee or accept any liability with respect to the correctness of information in this document. Copyright by Volkswagen AG.
satelettronica

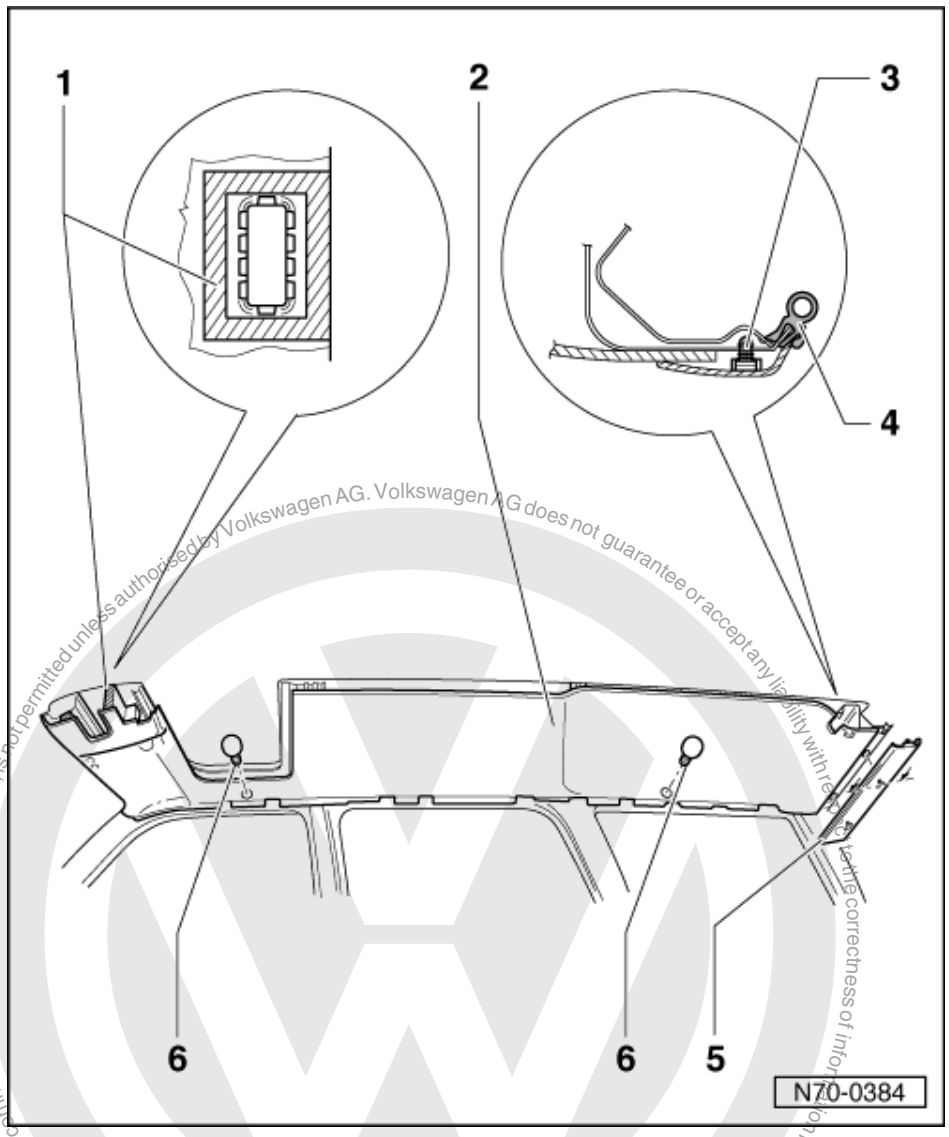

Copyright by Volkswagen AG. Volkswagen AG does not guarantee or accept any liability with respect to the correctness of information in this document. Copyright by Volkswagen AG. Protected by copyright. Copying for private or commercial purposes, in part or in whole, is not permitted unless authorised by Volkswagen AG.

satelettronica

Installing

Note:

- Ensure clips -3- are seated correctly before installing end strip -5-.
- Spacer -1- (self-adhesive) is stuck onto reverse side of moulded headliner.

- Align moulded headliner -2- at front with sun visor mountings and at sides with holes for plugs -6-.
- Press in plugs -6-.
- Secure moulded headliner at front with sun visor mountings.
- Press end strip -5- into roof frame.
- Fit on attachments.

72 - Seat frames

1 - Front seat

1.1 - Front seat

1.2 - Tools

Special tools, workshop equipment, testers, measuring instruments and auxiliary items required

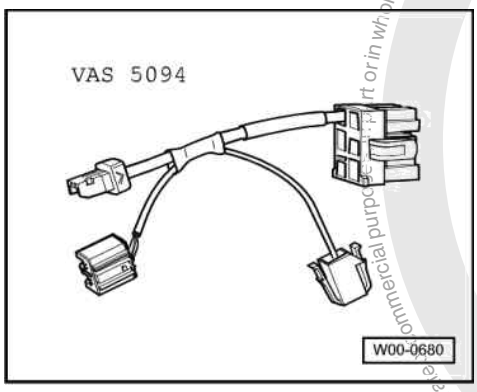

- -> VAS 5094 Airbag adapter

1.3 - Removing seat

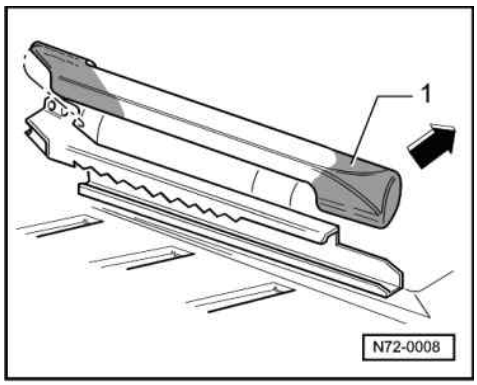

- Slide seat forward.
- -> Take cover strip -1- off inner seat rail towards rear in direction of arrow.

Protected by copyright. Copying for private or commercial purposes, in part or in whole, is not permitted unless authorised by Volkswagen AG. Volkswagen AG does not guarantee or accept any liability with respect to the correctness of information in this document. Copyright by Volkswagen AG.
satelettronica

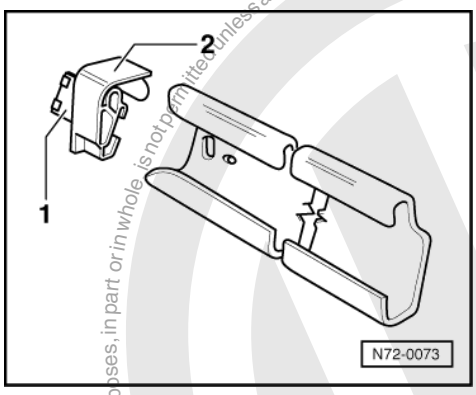

- -> Lever locking device -1- on cover -2- off onto stop or pull out using pliers

Note:

With later versions the locking device -1- for cover -2- is discontinued.

- Take cover -2- off the rear of the outer seat rail.

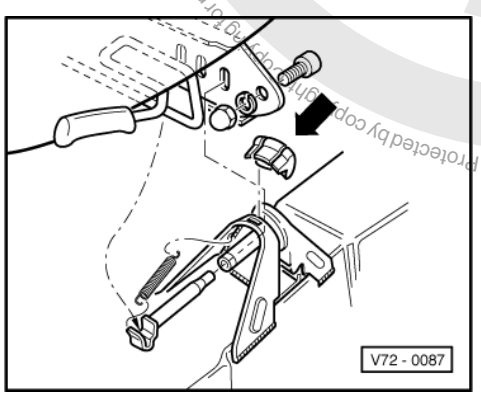

- -> Remove cap nut and spring washer then take out socket head bolt.
- Disconnect seat heating connector (if fitted).
- Release locking rod and push seat rearwards out of seat rails.

Note:

If longitudinal adjustment is difficult and/or there is excessive play, the seat front -arrow- and rear sliding pieces are to be checked and if necessary replaced.

1.4 - Removing and installing front seat with side airbag

Warning!
Disconnect battery earth strap before working on the electrical system.

Removing

Notes:

- Before disconnecting the battery see the note concerning the coding in the instruction manual for the radio.
- After connecting battery, check vehicle equipment (radio, clock, electric windows) as per Workshop manual and/or Owner's manual.

Protected by copyright. Copyright by Volkswagen AG. Volkswagen AG does not guarantee or accept any liability with respect to the correctness of information in this document. Copyright by Volkswagen AG. Commercial purposes, in part or in whole, is not permitted unless authorised by Volkswagen AG.
satelettronica

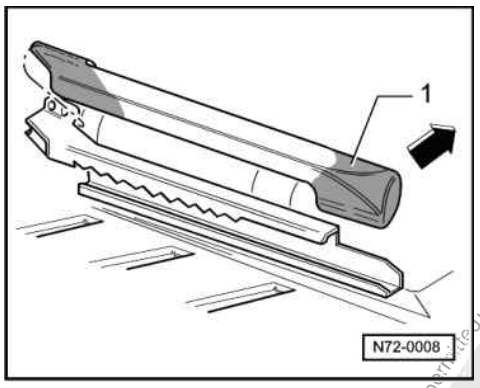

- Slide seat forward.
- -> Take cover strip -1- off inner seat rail towards rear in direction of arrow.

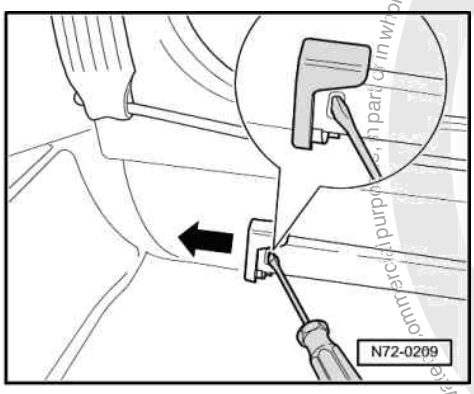

- -> Using a screwdriver, press the locking catch backwards and take off cover from seat rail in direction of arrow.

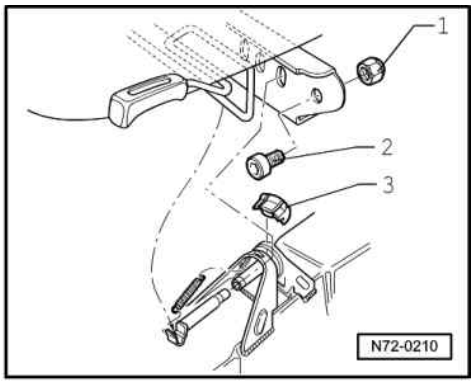

- -> Unscrew cap nut -1- and remove bolt -2-.
- Release locking rod and push seat rearwards out of seat rails.

Protected by copyright. Copying for private or commercial purposes, in part or in whole, is not permitted unless authorised by Volkswagen AG. Volkswagen AG does not guarantee or accept any liability with respect to the correctness of information in this document. Copyright by Volkswagen AG.
satelettronica

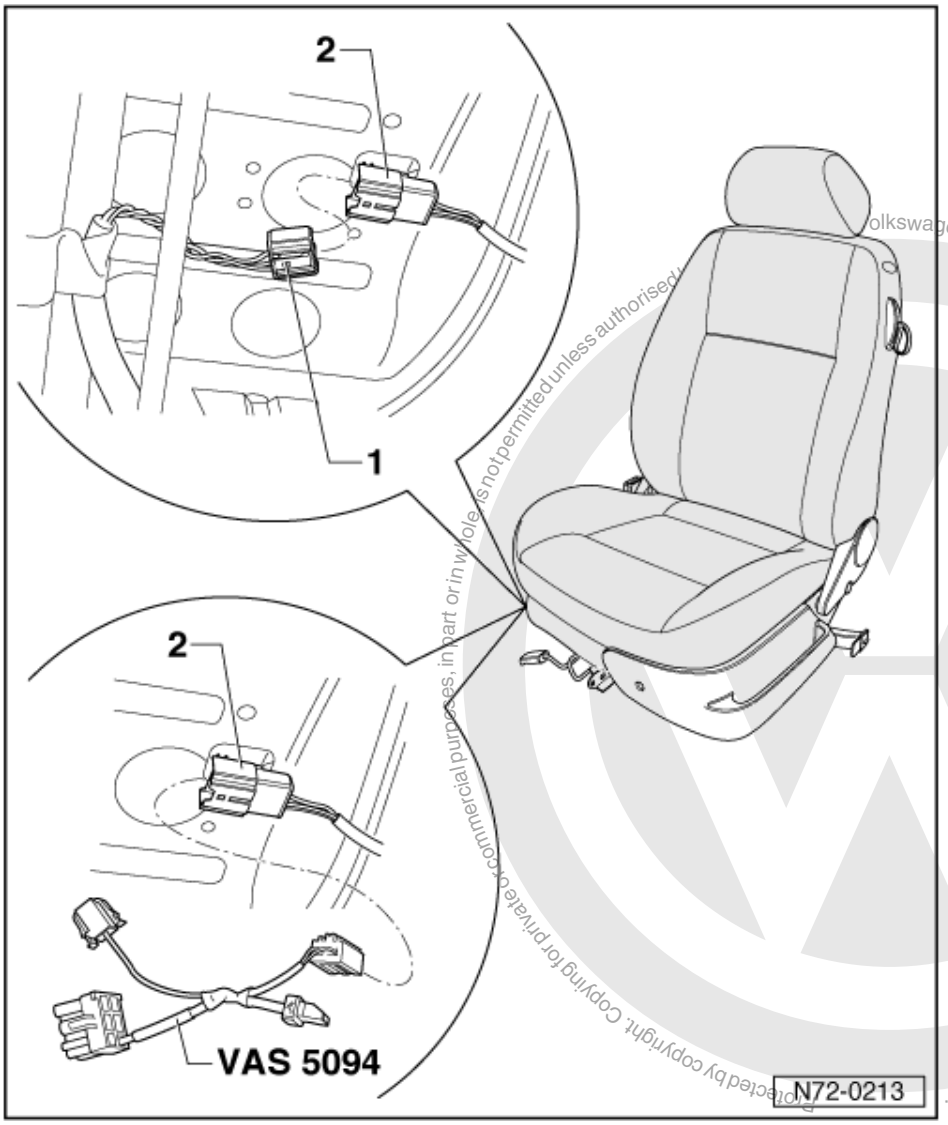

Note:

- Before separating the igniter and earth wire the mechanic must electrostatically discharge him/herself (touch door lock or vehicle body briefly).

- Lift up seat at rear and separate wiring harness to side airbag -1- from connector housing -2-.
- Fit airbag adapter VAS 5094 into connector housing -2-.
- Separate connector for heated seat (if fitted).

Installing

Install in reverse order.

Note:

- If the airbag fault warning lamp (K 75) signals a fault after assembling then the fault memory must be erased and interrogated again with fault reader V.A.G 1551

=> Body self-diagnosis; Repair group 01; Self-diagnosis for airbag systems. Self-diagnosis for airbag systems.

Volkswagen AG does not guarantee or accept any liability with respect to the correctness of information in this document. Copyright by Volkswagen AG.
Protected by copyright. Copying for private or commercial purposes, in part or in whole, is not permitted unless authorised.
satelettronica

1.5 - Front bearing for folding front seat (Caddy) - Assembly overview

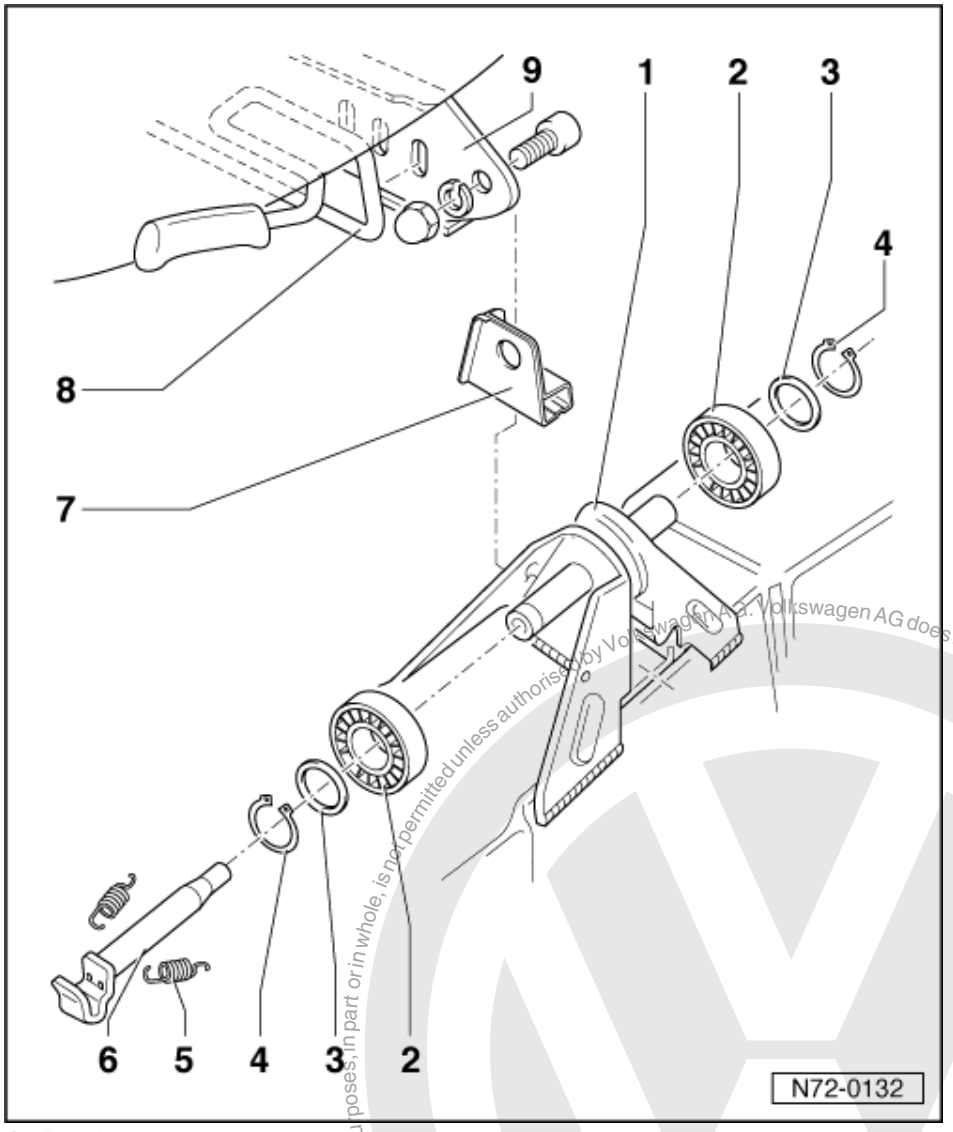

1 Bracket
2 Roller
- Lubricate with multi-purpose grease

3 Washer
4 Circlip
5 Spring
6 Locking rod
- Lubricate with multi-purpose grease

7 Guide
- Removing:
- Remove seat => Page 156 .
- Pull locking rod - 6 - out of bracket and pull guide out to rear.

Protected by copyright. Copying for private or commercial purposes, in part or in whole, is not permitted unless authorised by Volkswagen AG. Volkswagen AG does not guarantee or accept any liability with respect to the correctness of information in this document. Copyright by Volkswagen AG.
satelettronica

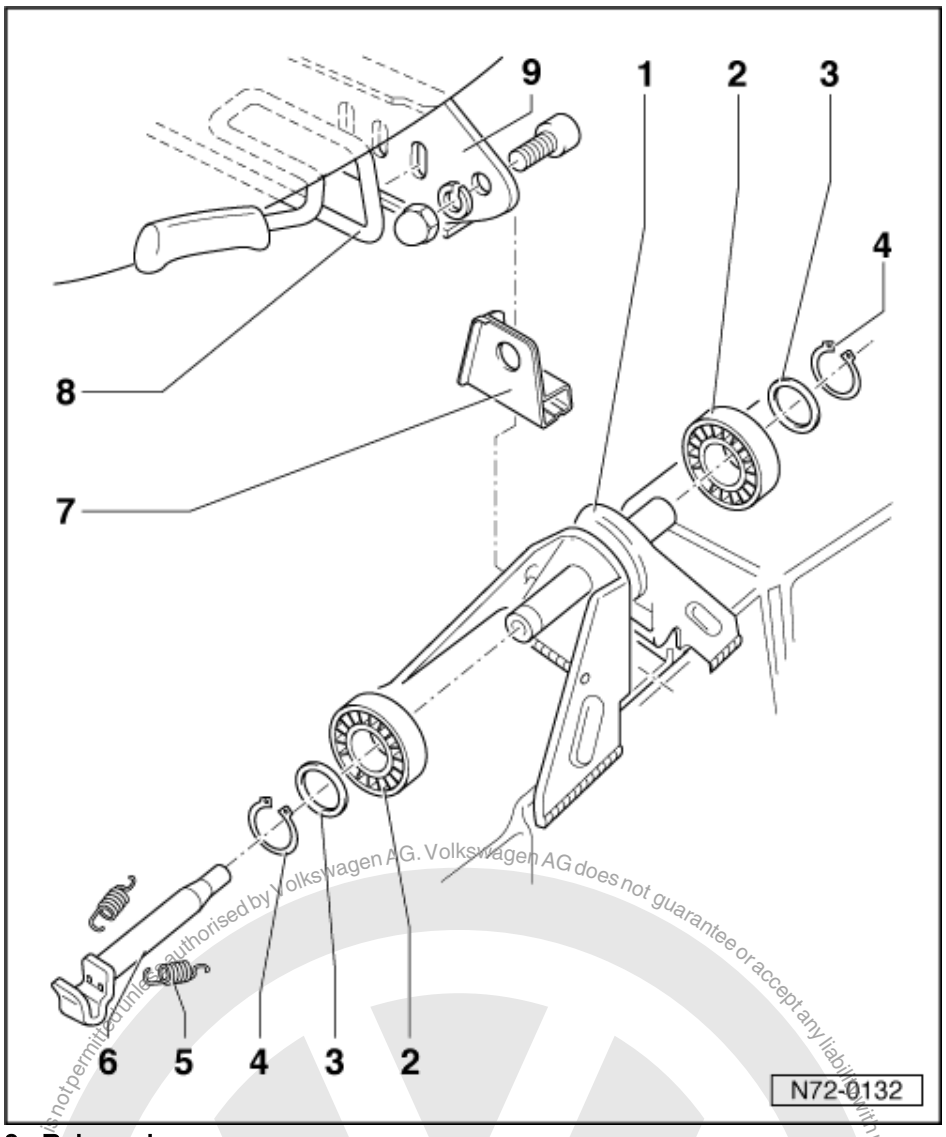

8 Release lever
9 Seat frame locking rail

Protected by copyright. Copying for private or commercial purposes, in part or in whole, is not permitted unless authorised by Volkswagen AG. Volkswagen AG does not guarantee or accept any liability with respect to the correctness of information in this document. Copyright by Volkswagen AG.
satelettronica

1.6 - Removing and installing backrest

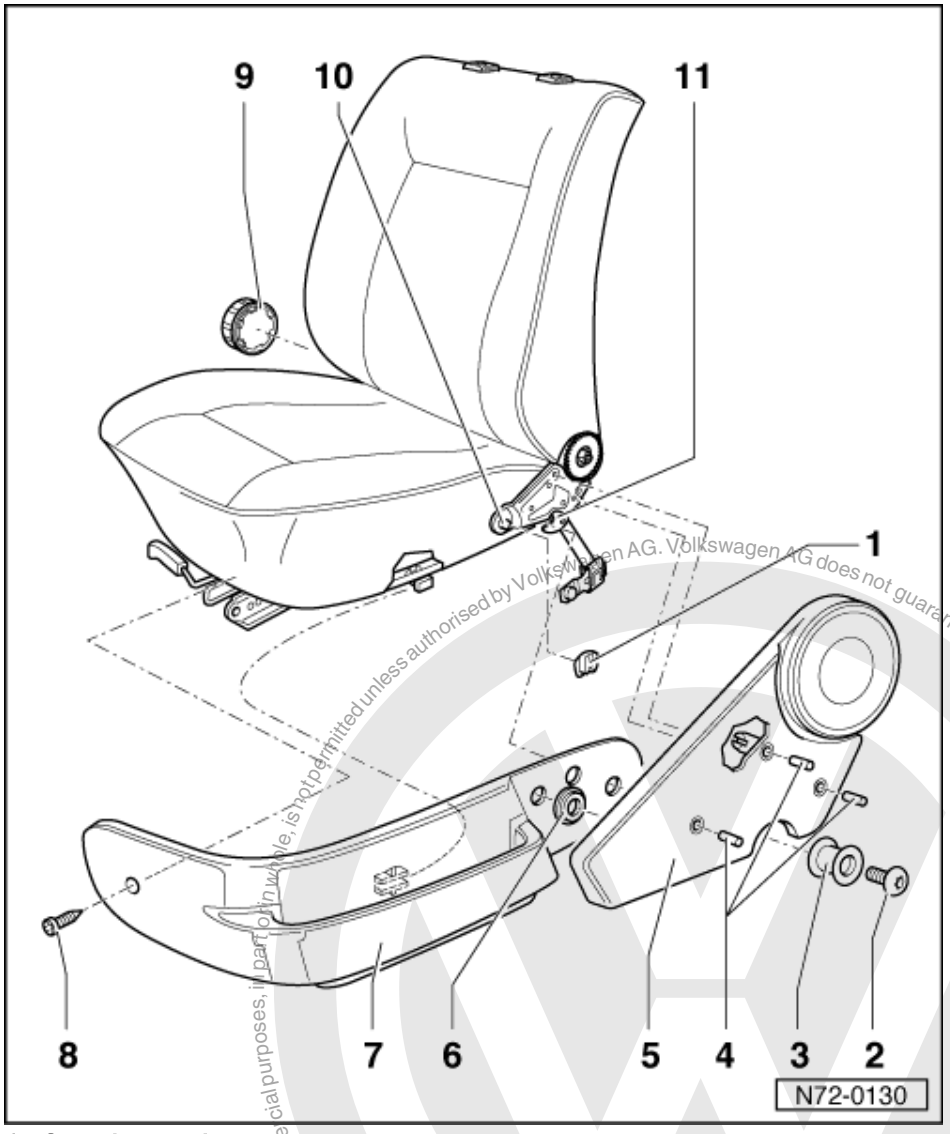

1 Securing washer

2 Torx bolt
- 4 Nm
- Self-locking

3 Bush

4 Expander pin

5 Cover

6 Spacer ring
- Only on old version
- On new version the spacer ring is cast on trim - 7 -

Protected by copyright. Copying for private or commercial purposes, in part or in whole, is not permitted unless authorised by Volkswagen AG. Volkswagen AG does not guarantee or accept any liability with respect to the correctness of information in this document. Copyright by Volkswagen AG.
satelettronica

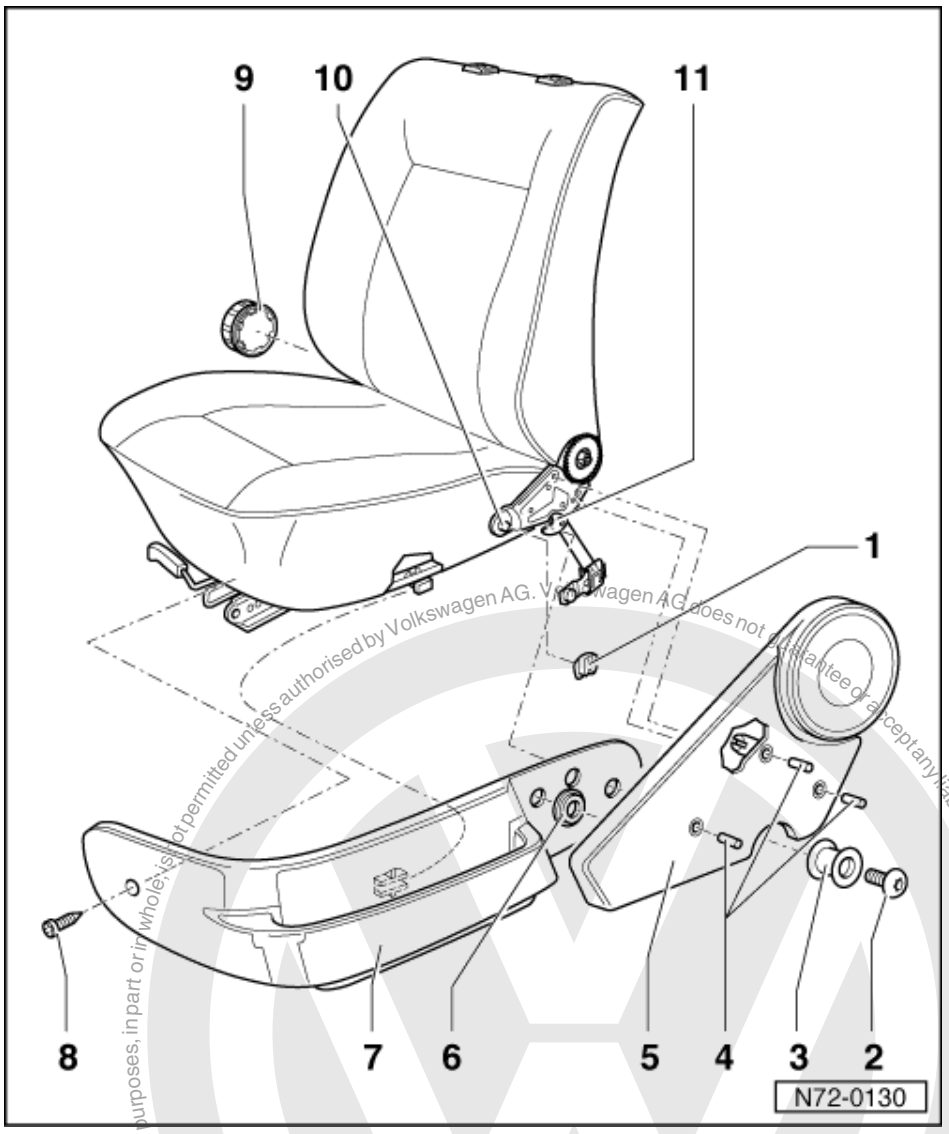

7 Trim
- Polo Classic and Polo Estate only
- Removing:
- Remove backrest.
- Unbolt cross-head screw - 2 - and remove spacer ring - 6 - if fitted.
- Unscrew Torx screw - 2 - and pull off bush - 3 -.
- Lift rear trim over backrest mounting pin and push forwards.

8 Cross-head screw

9 Adjusting knob

10 Mounting pin

11 Locking hook

Protected by copyright. Copyright by Volkswagen AG.
Copyright by Volkswagen AG. Volkswagen AG does not guarantee or accept any liability with respect to the correctness of information in this document. Copying for private or commercial purposes, in part or in whole, is not permitted unless authorised by Volkswagen AG.
satelettronica

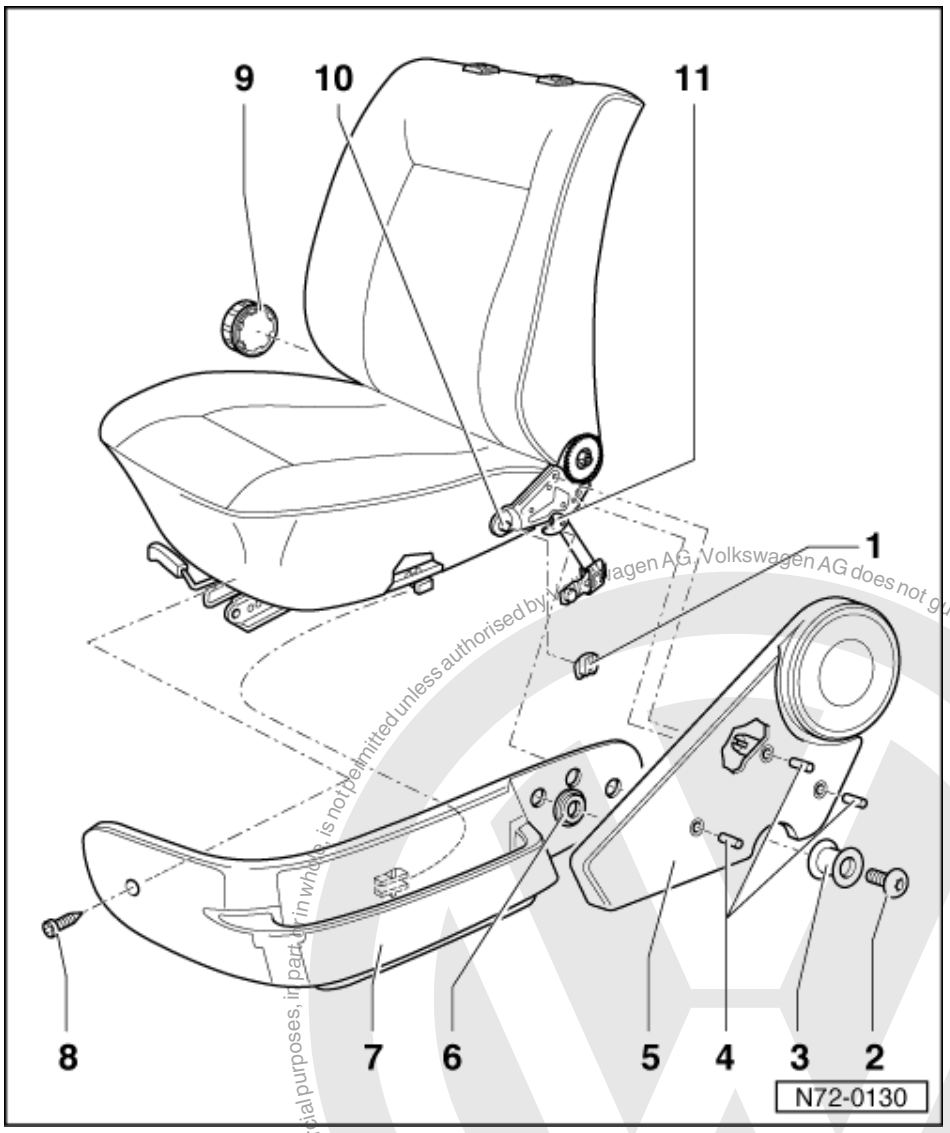

Protected by copyright. Copyright by Volkswagen AG. Volkswagen AG does not guarantee or accept any liability with respect to the correctness of information in this document. Copyright by Volkswagen AG. Reproduction, in whole or in part, for commercial purposes is not permitted unless authorised by Volkswagen AG.
satelettronica

Removing

- Remove seat => Page 156.
- Press off adjusting knob -9-.
- Drive (left and right) expander pins - 4 - out towards inside. Press expander pins which contact the seat frame or upholstery out downwards, from above, with a screwdriver.
- Pull cover - 5 - (left and right) off backrest frame.
- Pull off (left and right) retainer -7-.
- Release locking hook - 11 - and fold backrest forwards.
- Pull backrest frame (left and right) off mounting pin - 10 -.

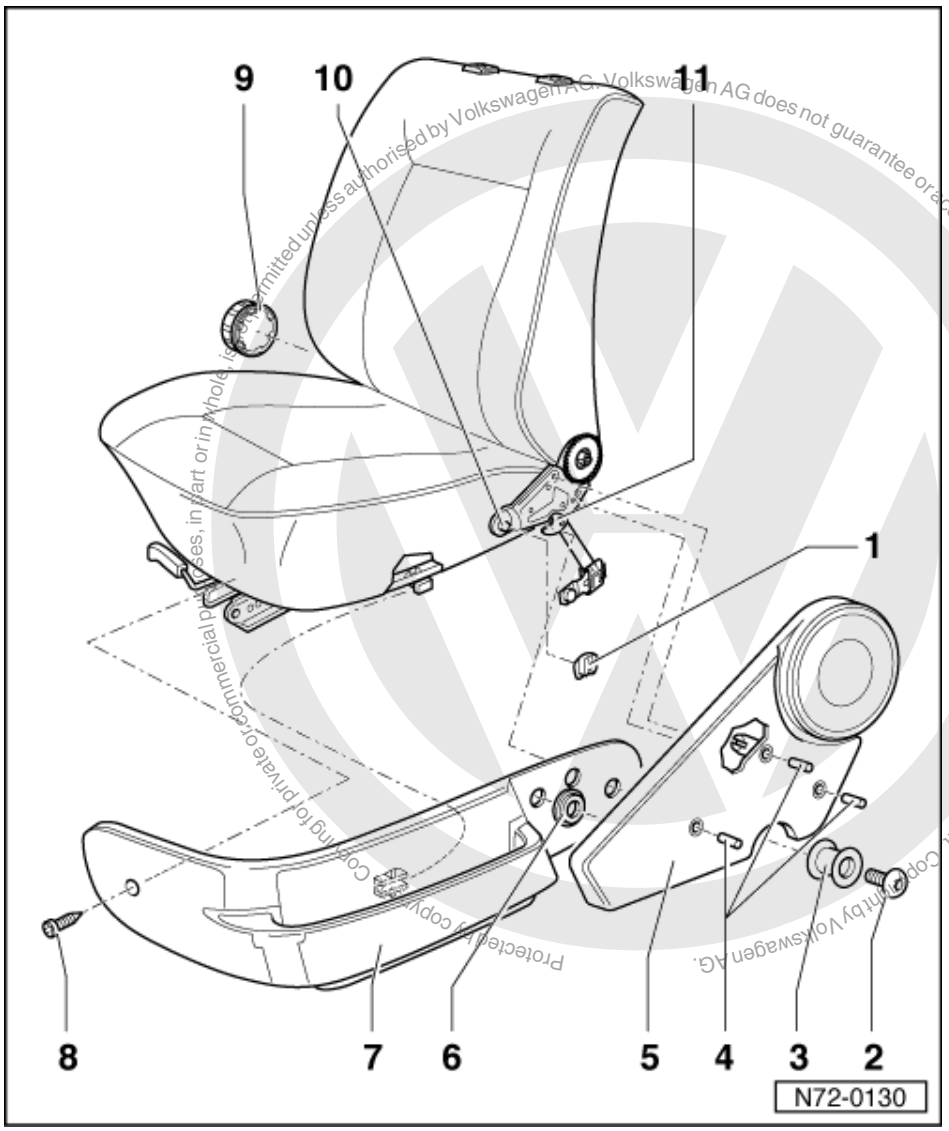

Protected by copyright. Copying for private or commercial purposes, in part or in whole, is not permitted unless authorised by Volkswagen AG. Volkswagen AG does not guarantee or accept any liability with respect to the correctness of information in this document. Copyright by Volkswagen AG.

satelettronica

Installing

Installation is to be carried out in reverse order.

Notes:

- Check (left and right) bushes -3- for damage; renew if necessary.
- Before installing backrest fit trim - 7 - and also ensure that earlier version spacer rings - 6 - are seating correctly.

1.7 - Seat frame - Assembly overview

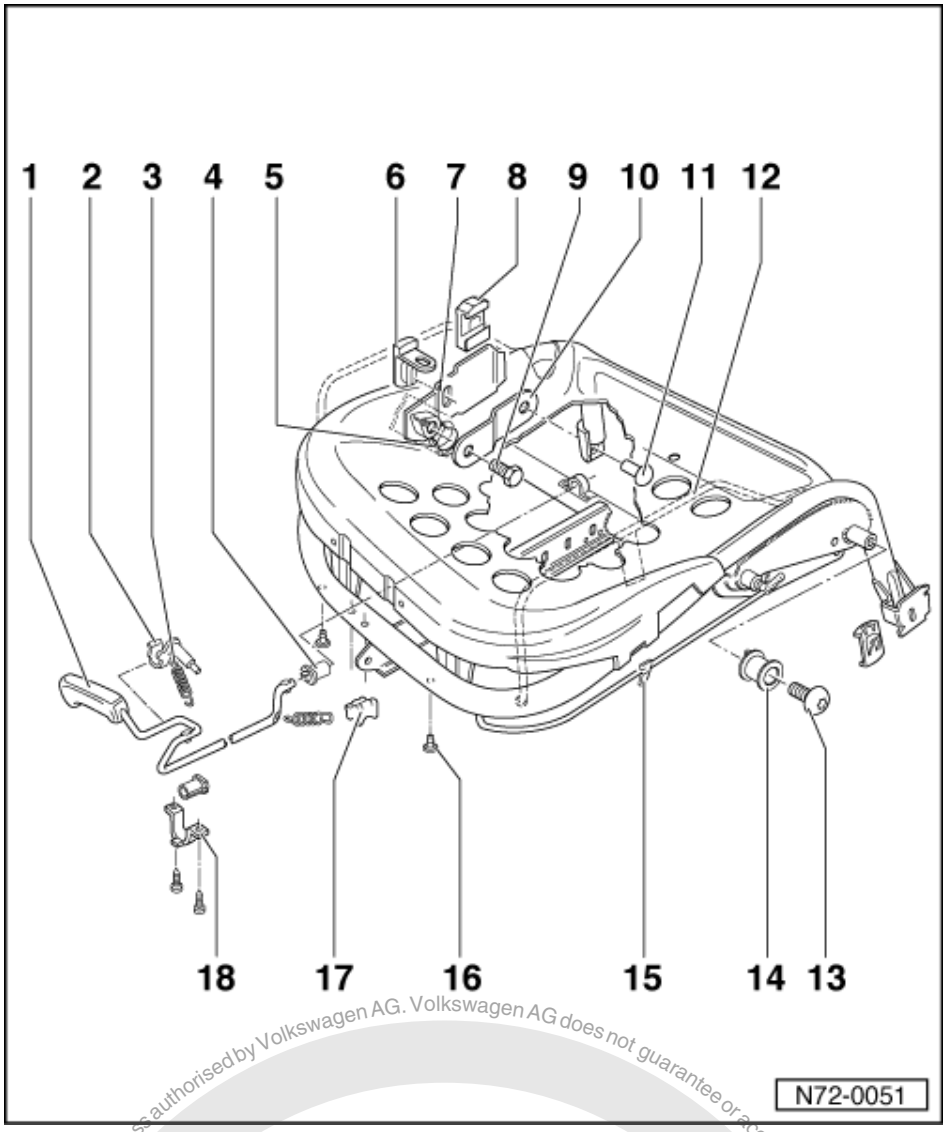

1 Operating lever
2 Locking rod
- Lubricate with multi-purpose grease

3 Spring
4 Bearing bush
5 Clip
- Only seat with height adjustment

6 Thrust piece
- Only seat with height adjustment
- Press thrust piece into sliding plate and bend over tab

7 Sliding plate
8 Sliding piece

Protected by copyright. Copying for private or commercial purposes, in part or in whole, is not permitted unless authorised by Volkswagen AG. Volkswagen AG does not guarantee or accept any liability with respect to the correctness of information in this document. Copyright by Volkswagen AG.

satelettronica

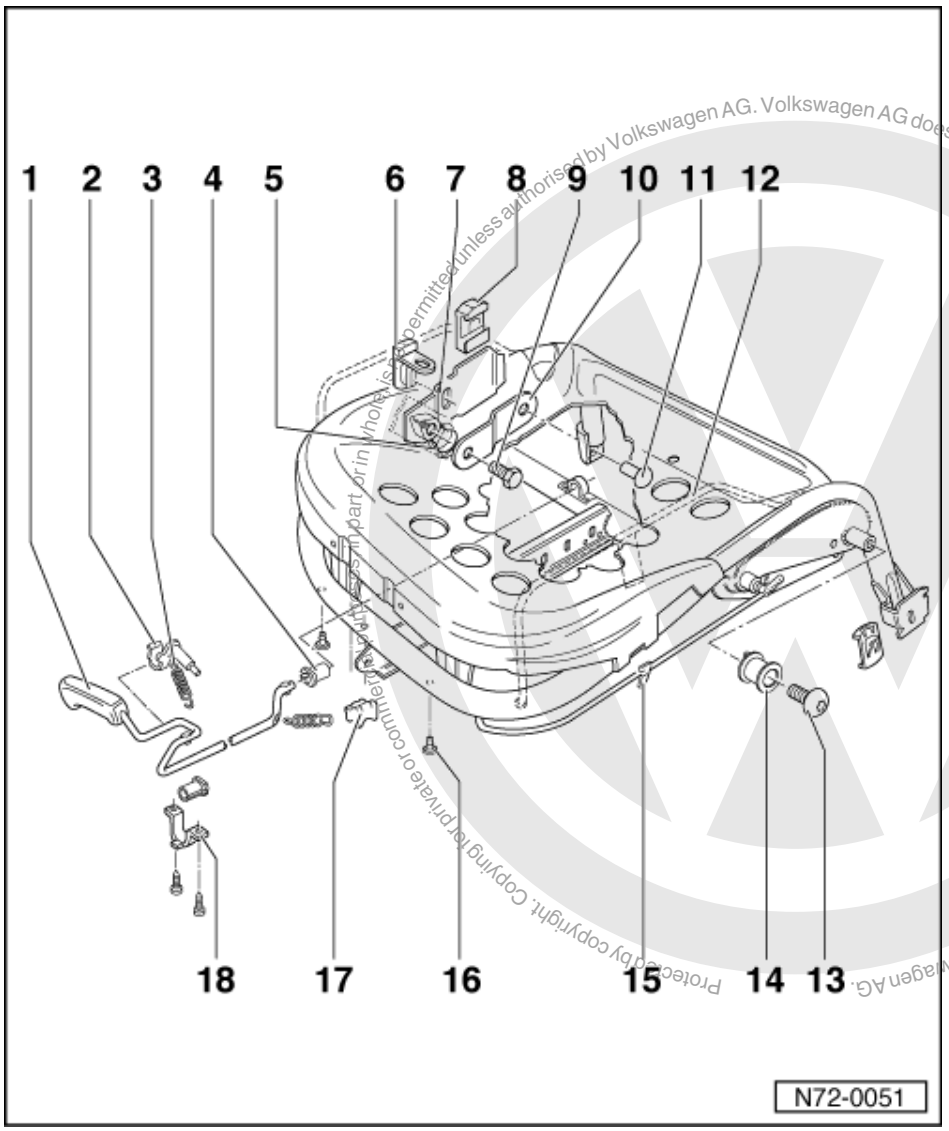

Protected by copyright. Copying for private or commercial purposes, in part or in whole, is not permitted unless authorised by Volkswagen AG. Volkswagen AG does not guarantee or accept any liability with respect to the correctness of information in this document. Copyright by Volkswagen AG.

satelettronica

9 Hexagon bolt
- 60 Nm

10 Reinforcing plate

11 Rivet

12 Supports (only sport seat)

13 Torx bolt
- 4Nm
- Self-locking

14 Bush

15 Hook-in tabs for upholstery

16 Clips for upholstery

17 Sliding piece
- Grease contact surface of seat frame with multi-purpose grease

18 Bush bracket

1.8 - Folding seat frame (Caddy) - Assembly overview

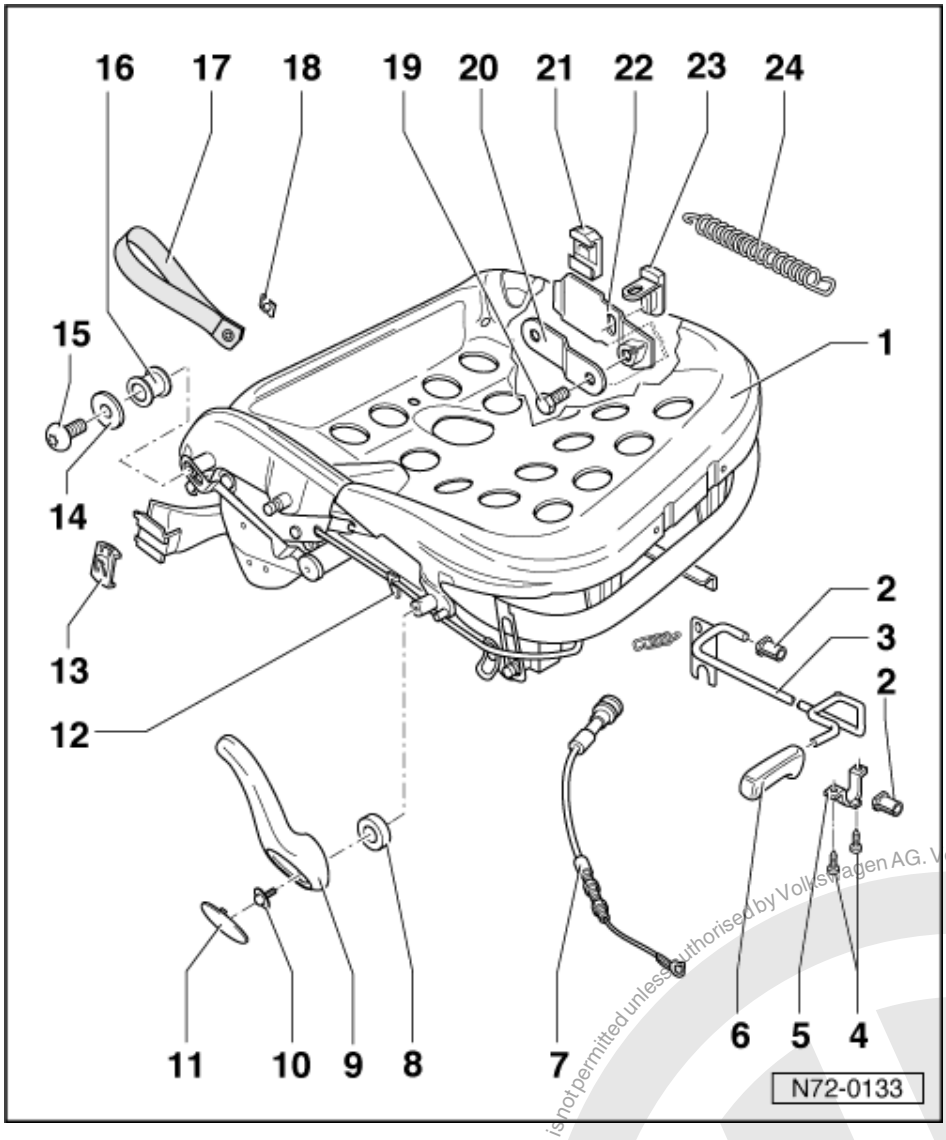

Warning!
When working on the seat remember, that the seat is under spring pressure in the normal position and will fold together when operating the release or when working on the release mechanism. Danger of crushing!

1 Seat frame
2 Bearing bush
3 Release lever
4 Cross-head screw
5 Bush bracket
6 Grip

satelettronica
Protected by copyright. Copying for private or commercial purposes, in part or in whole, is not permitted unless authorised by Volkswagen AG. Volkswagen AG does not guarantee or accept any liability with respect to the correctness of information in this document. Copyright by Volkswagen AG.

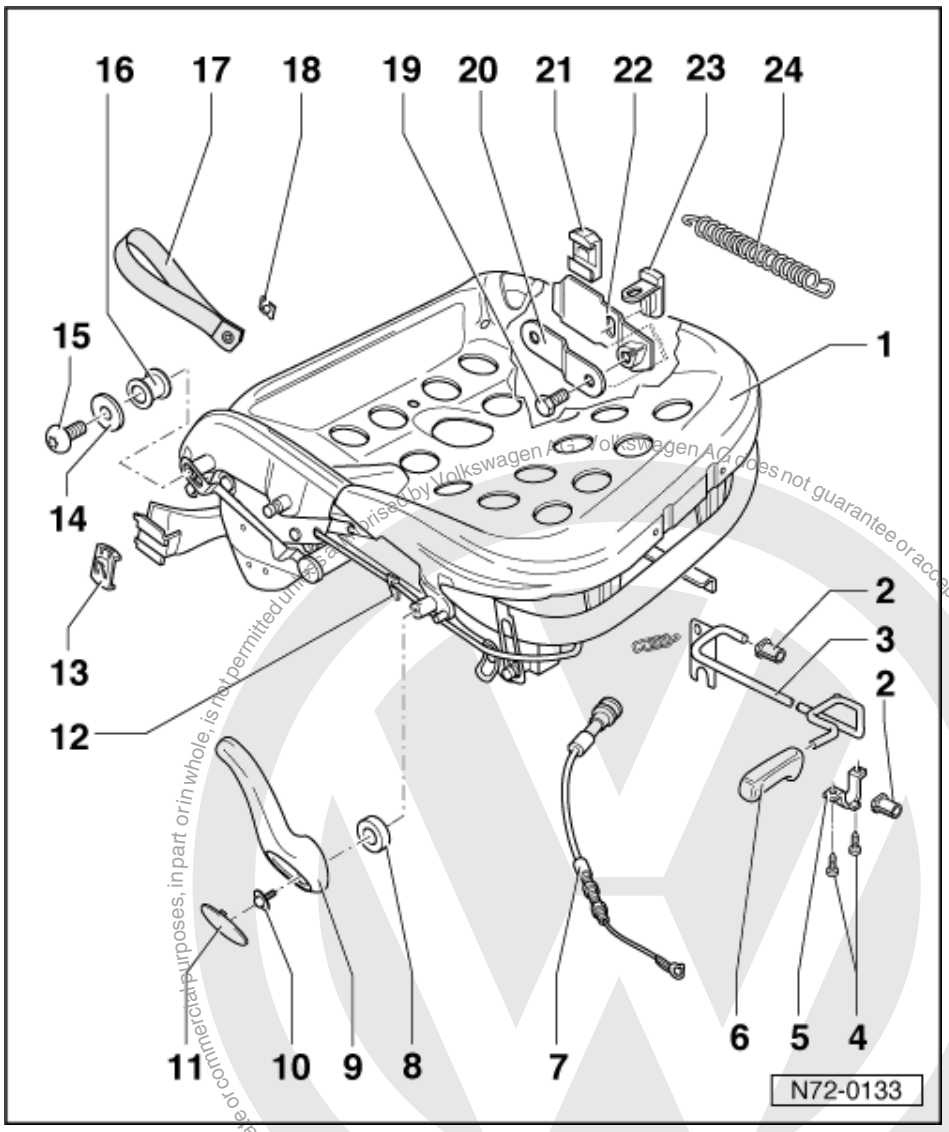

7 Cable
- For release
- Removing and installing => Page 170
- Hooked under the side of the seat base

8 Foam ring

9 Release lever

10 Cross-head screw
- With washer

11 Cover cap

12 Hook-in tabs for upholstery

13 Sliding piece

14 Washer

15 Bolt
- 4Nm
- Self-locking

16 Bush

Protected by copyright. Copyright by Volkswagen AG.
Copyright by Volkswagen AG does not guarantee or accept any liability with respect to the correctness of information in this document.
Copyright by Volkswagen AG. Reproduced or transmitted in whole or in part for private or commercial purposes, is not permitted unless authorised by Volkswagen AG.
satelettronica

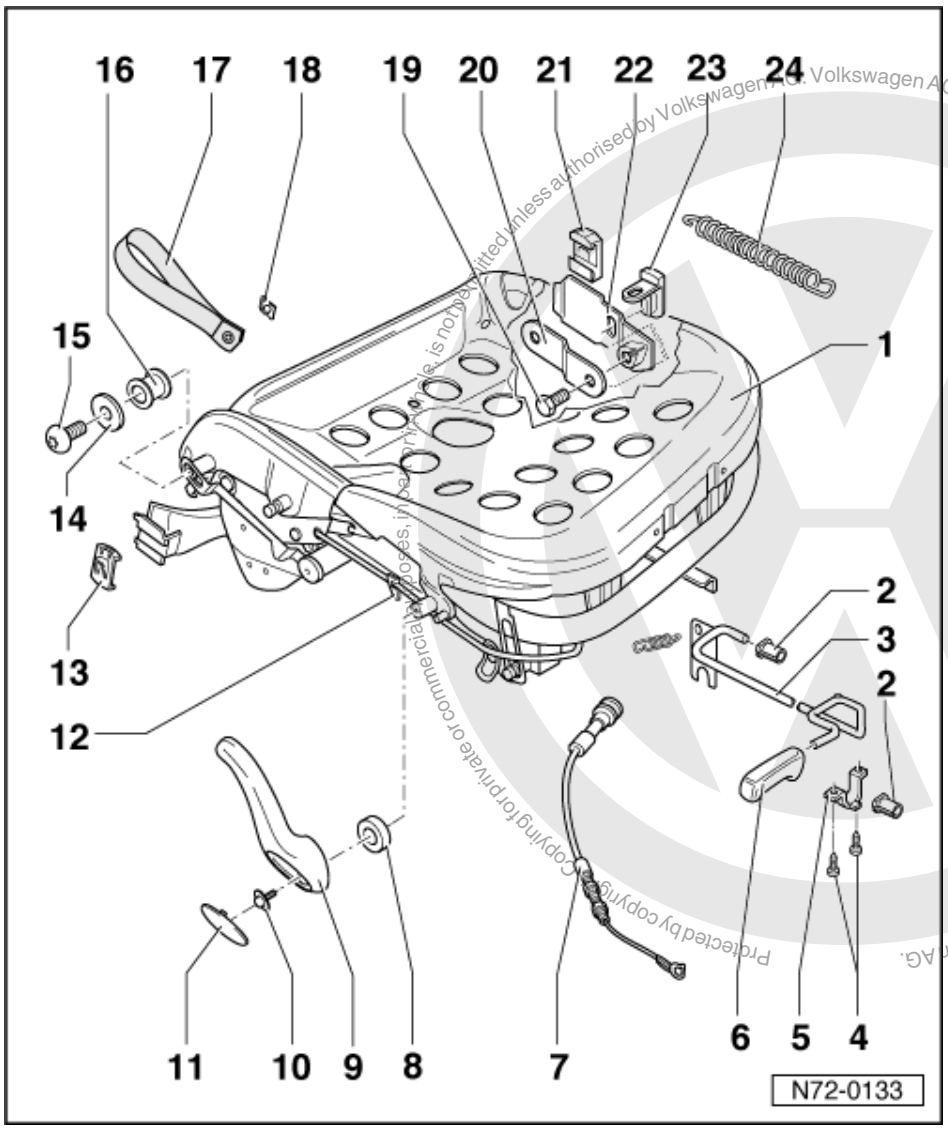

17 Loop
- For release
- Removing => Page 171

18 Clip

19 Hexagon bolt
- 60 Nm

20 Reinforcing plate

21 Sliding piece

22 Sliding plate

23 Thrust piece
- Press thrust piece into sliding plate and bend over tab

24 Spring
- Pulls folding mechanism together when releasing the seat
- Hooked under the side of the seat base

1.9 - Removing and installing cable for releasing folding seat (Caddy)

- Remove front seat => Page 156 .

Protected by copyright. Copying for private or commercial purposes, in any form or medium is not permitted unless authorised by Volkswagen AG. Volkswagen AG does not guarantee or accept any liability with respect to the correctness of information in this document. Copyright by Volkswagen AG.
satelettronica

Warning!
When working on the seat remember, that the seat is under spring pressure in the normal position and will fold together when operating the release or when working on the release. Danger of crushing!

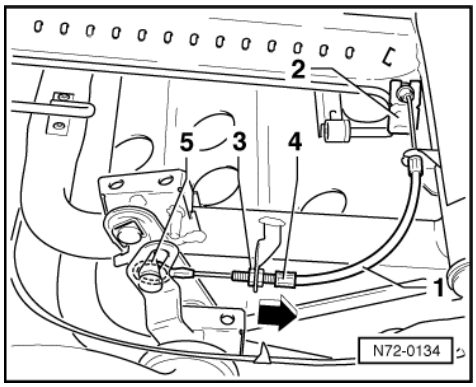

- Operate release lever and fold seat together.
- -> Unhook cable -1- on operating lever -2- and bearing bracket.
- Unscrew lock nut -3- on cable tensioning device and pull threaded sleeve -4- out in direction of arrow.
- Unclip cable eye -5-.

Install in reverse order.

Adjusting cable

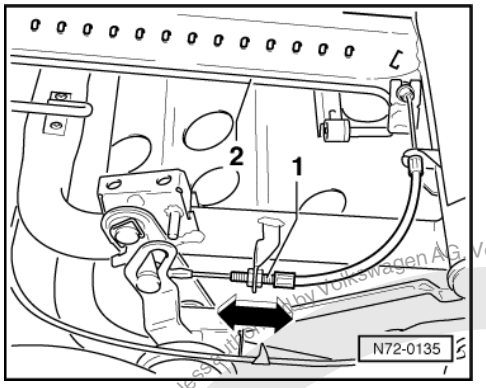

- Install cable completely.
- -> Adjust -arrows- cable sleeve -1- so that the folding mechanism and the operating rod -2- operate at the same time.

1.10 - Removing pull loop

- Remove front seat => Page 156 .

Warning!
When working on the seat remember, that the seat is under spring pressure in the normal position and will fold together when operating the release or when working on the release. Danger of crushing!

Protected by copyright. Copying for private or commercial purposes, in part or in whole, is not permitted unless authorised by Volkswagen AG. Volkswagen AG does not guarantee or accept any liability with respect to the correctness of information in this document. Copyright by Volkswagen AG.
satelettronica

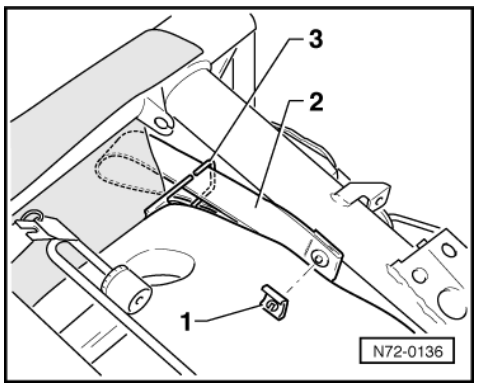

- Operate release lever and fold seat together.
- -> Lever off clip -1-, pull loop -2- off pin and pull out from guide -3-.

1.11 - Backrest frame - Assembly overview

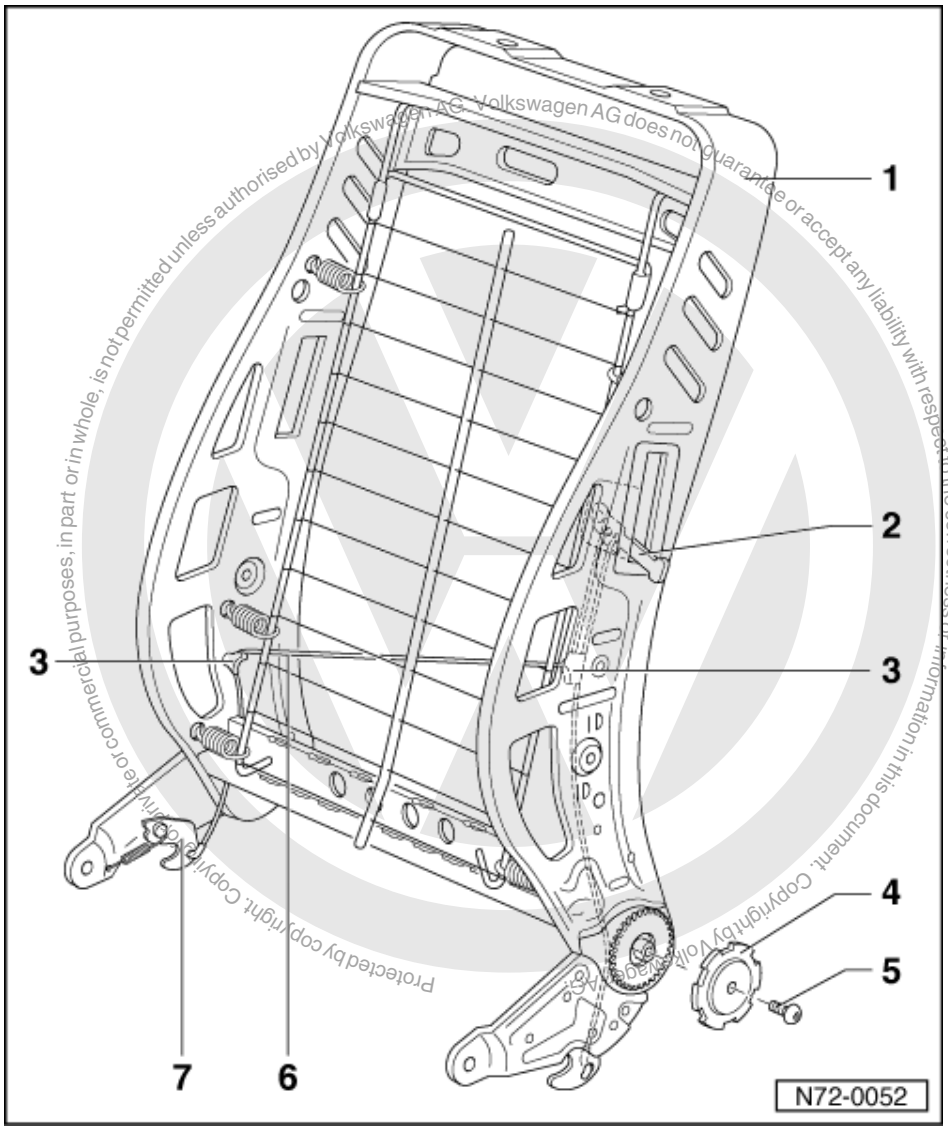

1 Backrest frame
2 Release lever
- Caddy only

3 Cable guide

satelettronica

- Caddy only

4 Adjustment knob

5 Torx bolt
- 6 Nm

6 Cable
- Caddy only

7 Locking hook

2 - Rear seat

2.1 - Rear seat

2.2 - Removing seat and backrest (split) (Caddy)

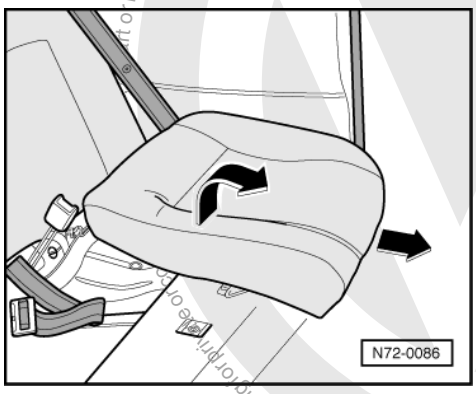

- -> Pull seat section forwards and fold up.

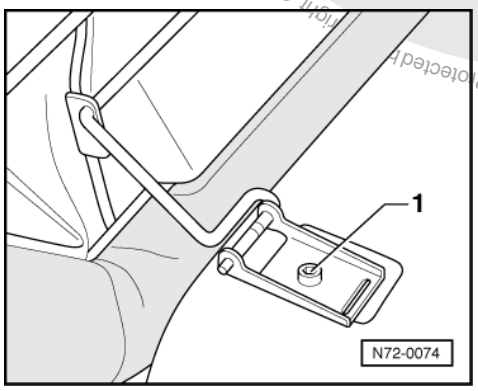

- -> Remove hexagon socket head bolts -1- and take out seat complete with hinges.

Copyright by Volkswagen AG. Volkswagen AG does not guarantee or accept any liability with respect to the correctness of information in this document. Copyright by Volkswagen AG. Protected by copyright. Copying for private or commercial purposes, in part or in whole, is not permitted unless authorised by Volkswagen AG.
satelettronica

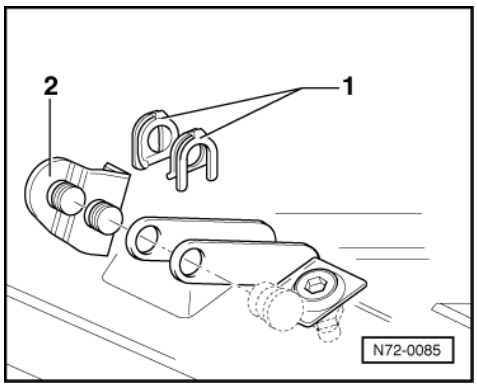

- Release both backrests and fold down.
- -> Pull securing clips -1- from adapter pin -2- on backrest centre mounting.

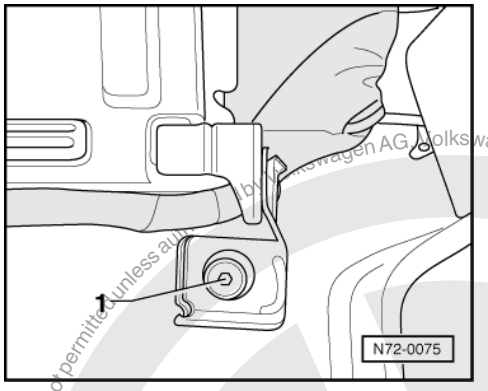

- -> Remove hexagon socket head bolts -1- and take out backrest with hinges.

2.3 - Removing seat and backrest (split) (Polo Classic, Polo Estate)

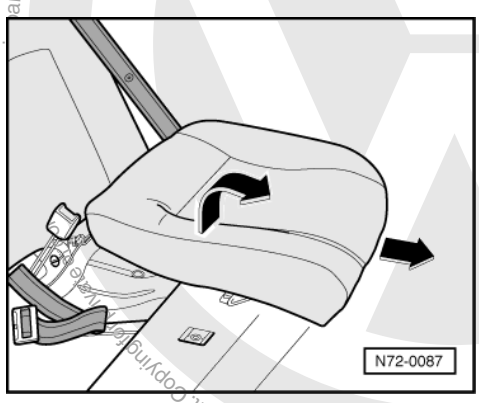

- -> Pull seat section forwards and fold up.

Protected by copyright. Copyright by Volkswagen AG.
Volkswagen AG does not guarantee or accept any liability with respect to the correctness of information in this document.
satelettronica

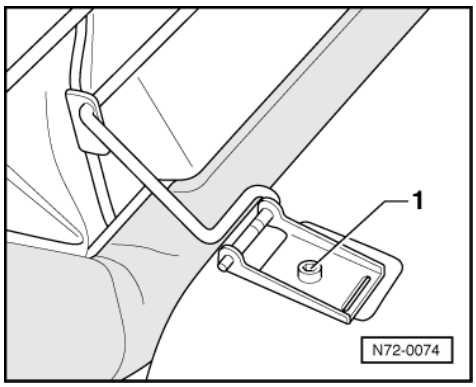

- -> Remove hexagon socket head bolts -1- and take out seat complete with hinges.

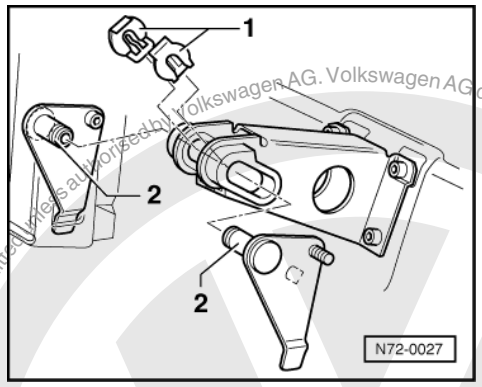

- Release both backrests and fold down.
- -> Pull securing clips -1- from adapter pin -2- on backrest centre mounting.

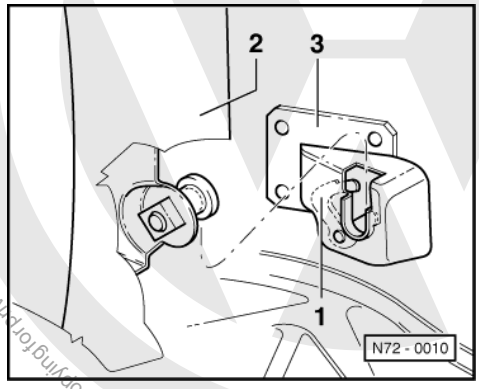

- -> Press locking hooks -1- on outer sides of backrests back with a screwdriver and pull backrest -2- out of backrest mounting -3- upwards.
- Guide the inner part of the backrest out of the centre mounting.

Protected by copyright. Copying for private or commercial purposes, in part or in whole, is not permitted unless authorised by Volkswagen AG. Volkswagen AG does not guarantee or accept any liability with respect to the correctness of information in this document. Copyright by Volkswagen AG.
satelettronica

74 - Seats - Upholstery, Covers

1 - Front seat cover and padding

1.1 - Front seat cover and padding

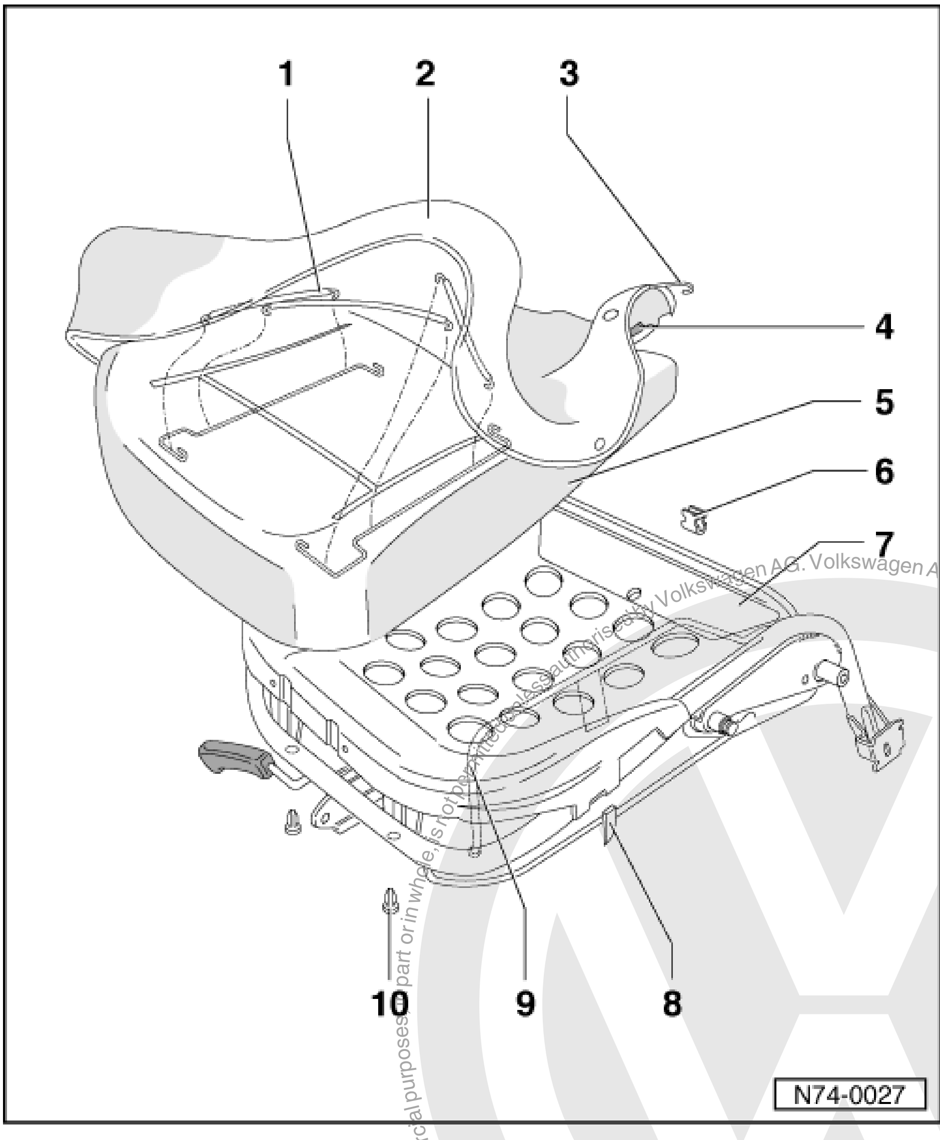

Protected by copyright. Copying for private or commercial purposes, in part or in whole, is not permitted unless authorised by Volkswagen AG. Volkswagen AG does not guarantee or accept any liability with respect to the correctness of information in this document. Copyright by Volkswagen AG.

satelettronica

1.2 - Removing and installing cover and padding for front seat cushion

1 **Padding wire**
- ◆ Connected in padding; disconnect and connect with V.A.G 1636

2 **Cover**
- ◆ Removing:
- \- Remove backrest.
- \- Removing cover and padding => Page 178 .

3 **Cover tensioning wire**

- First secure cover with clips and attach to hooking tabs, then pull tensioning wire tight and secure.

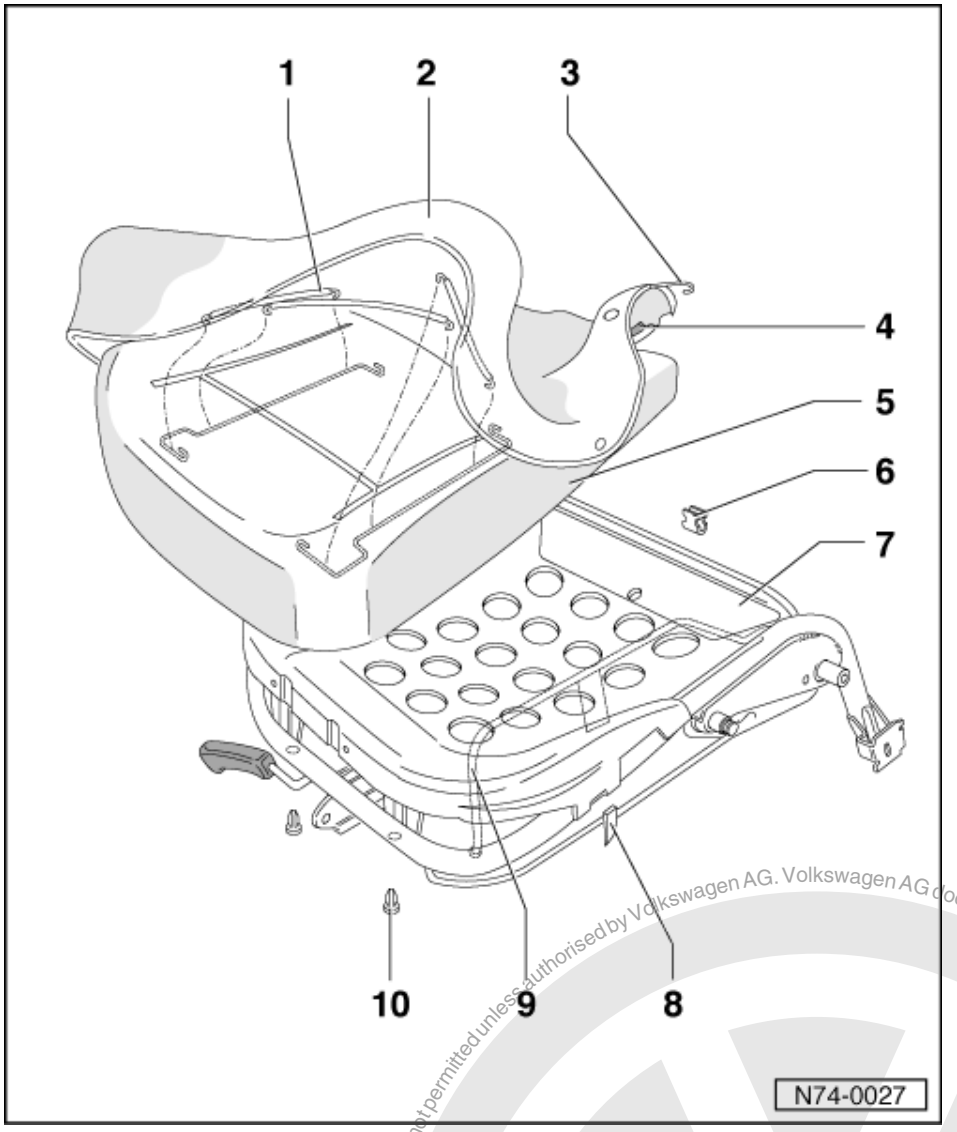

4 Clip strips
- On rear of seat, inserted from below
- Partially secured with three clamps - 6 -

5 Padding
- Removing:
- Remove backrest.
- Removing cover and padding
  => Page 178 .

6 Clip
- Only on seats where the clip strip - 4 - is not manufactured in plastic or seat frames without fitted support hooks on rear of seat
- Use these clips additionally when replacing cover - 2 - if necessary to ensure clip strip - 4 - seats correctly

Protected by copyright. Copying for private or commercial purposes, in part or in whole, is not permitted unless authorised by Volkswagen AG. Volkswagen AG does not guarantee or accept any liability with respect to the correctness of information in this document. Copyright by Volkswagen AG.
satelettronica

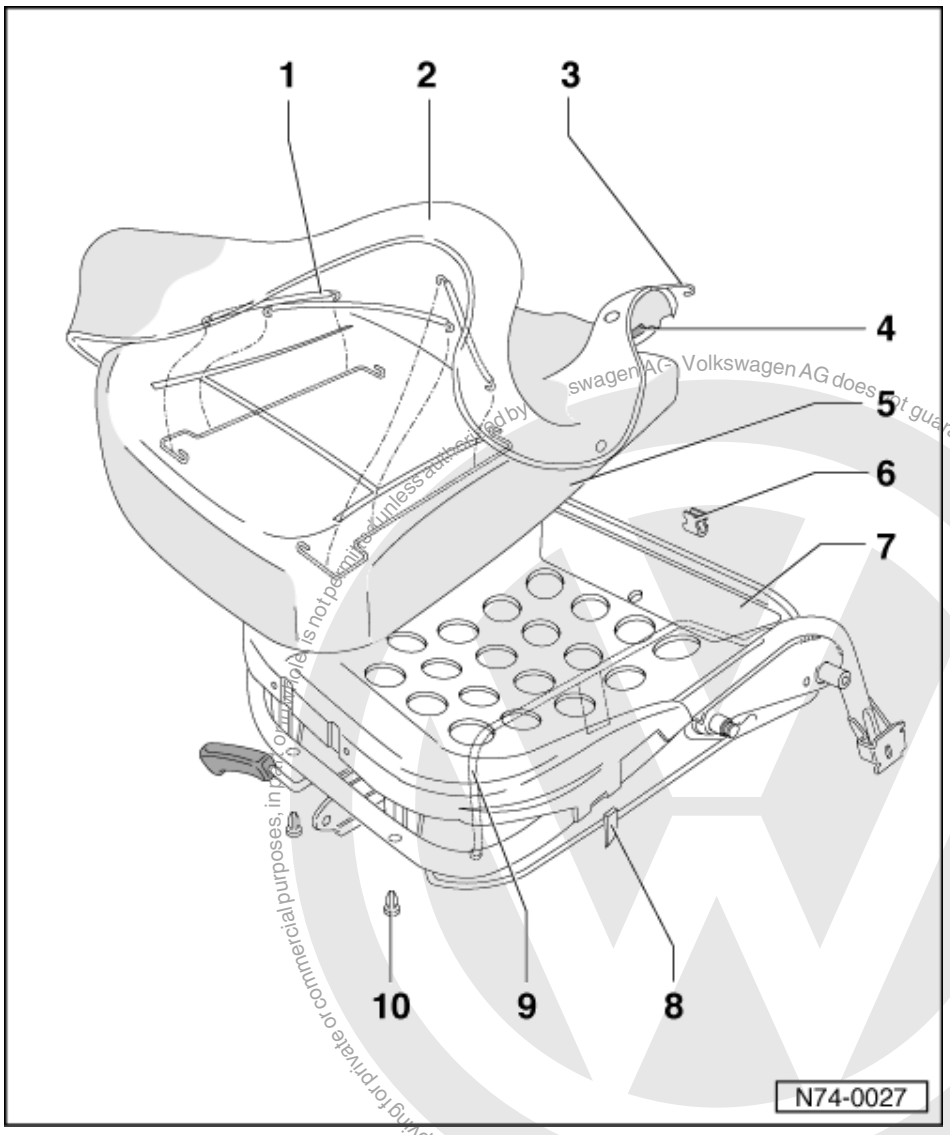

7 Seat frame
8 Cover hooking tabs
- On both sides

9 Supports (only sport seat)
10 Cover clip

Removing cover and padding

- Remove front seat => Page 156 .
- Remove backrest => Page 162 .

Protected by copyright. Copying for private or commercial purposes, in part or in whole is not permitted unless authorised by Volkswagen AG. Volkswagen AG does not guarantee or accept any liability with respect to the correctness of information in this document. Copyright by Volkswagen AG.
satelettronica

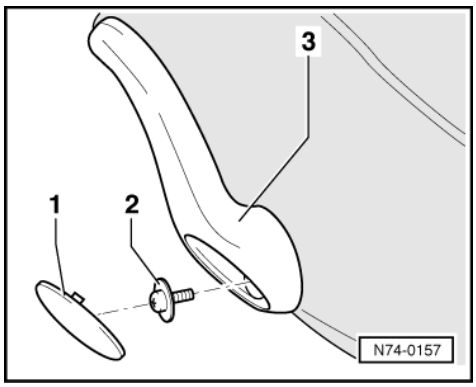

Folding seat (Caddy)

Warning!
When working on the seat remember, that the seat is under spring pressure in the normal position and will fold together when operating the release or when working on the release. Danger of crushing!

- -> Lever out cap -1- and remove cross-head screw with washer -2- located underneath.

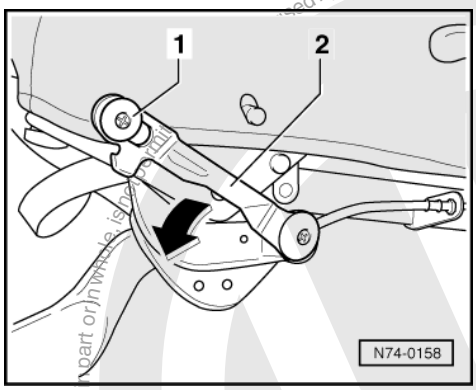

- Pull off release lever -3-.
- -> Remove bolt -1- (left and right) and press lever -2- downwards.

Continuation all vehicles

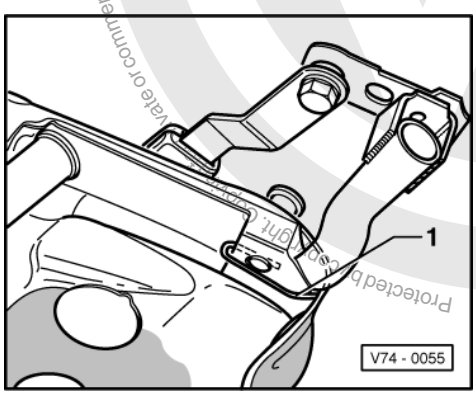

- -> Unhook left and right tensioning wire -1-.

Note:

When clipping in, the tensioning wire -1- should be retensioned slightly.

Protected by copyright. Copying for private or commercial purposes, in part or in whole, is not permitted unless authorised by Volkswagen AG. Volkswagen AG does not guarantee or accept any liability with respect to the correctness of information in this document. Copyright by Volkswagen AG.
satelettronica

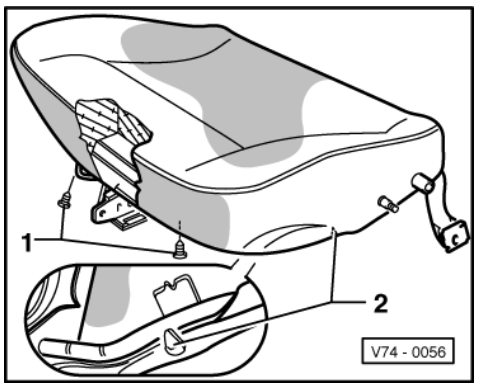

- -> Lever out clips -1- and open out left and right tabs -2-.

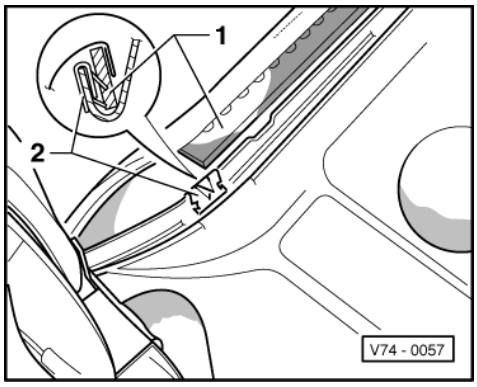

- -> Unclip clip strips -1- from seat base.

Note:

Clip strip -1- may, depending upon seat version be secured by clips -2-.

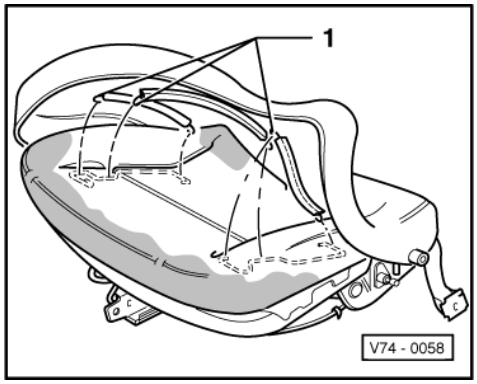

- -> Roll up seat cover until the padding wire -1- is visible.
- Unhook padding wire -1- with awl V.A.G 1636 and pull seat cover off.
- Take seat padding off seat frame.

Note:

To ensure easy assembly warm seat cover to approx. 30 °C before pulling on.

Protected by copyright. Copying for private or commercial purposes, in part or in whole, is not permitted unless authorised by Volkswagen AG. Volkswagen AG does not guarantee or accept any liability with respect to the correctness of information in this document. Copyright by Volkswagen AG.
satelettronica

1.3 - Removing and installing front backrest cover and padding (Caddy)

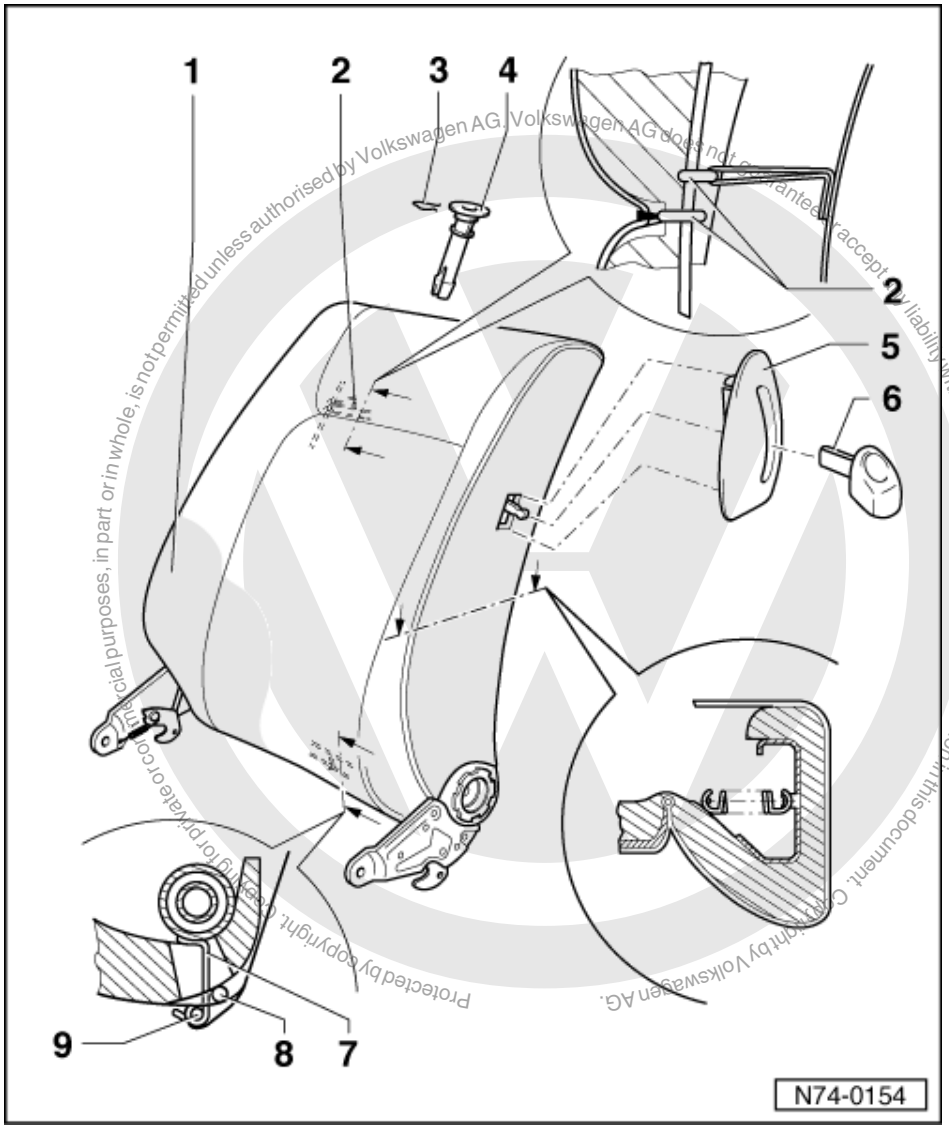

1 Cover
- Removing:
- Removing backrest => Page 162 .
- Removing cover and padding => Page 183 .
- Pulling on => Page 184

2 Padding wire
- On front and back sides of backrest
- Connected in padding; disconnect and connect with V.A.G 1636

3 Clip
- Pull head restraint out from guide to remove

satelettronica

Protected by copyright. Copyright by Volkswagen AG. Volkswagen AG does not guarantee or accept any liability with respect to the correctness of information in this document. Copying for private or commercial purposes, in part or in whole, is not permitted unless authorised by Volkswagen AG.

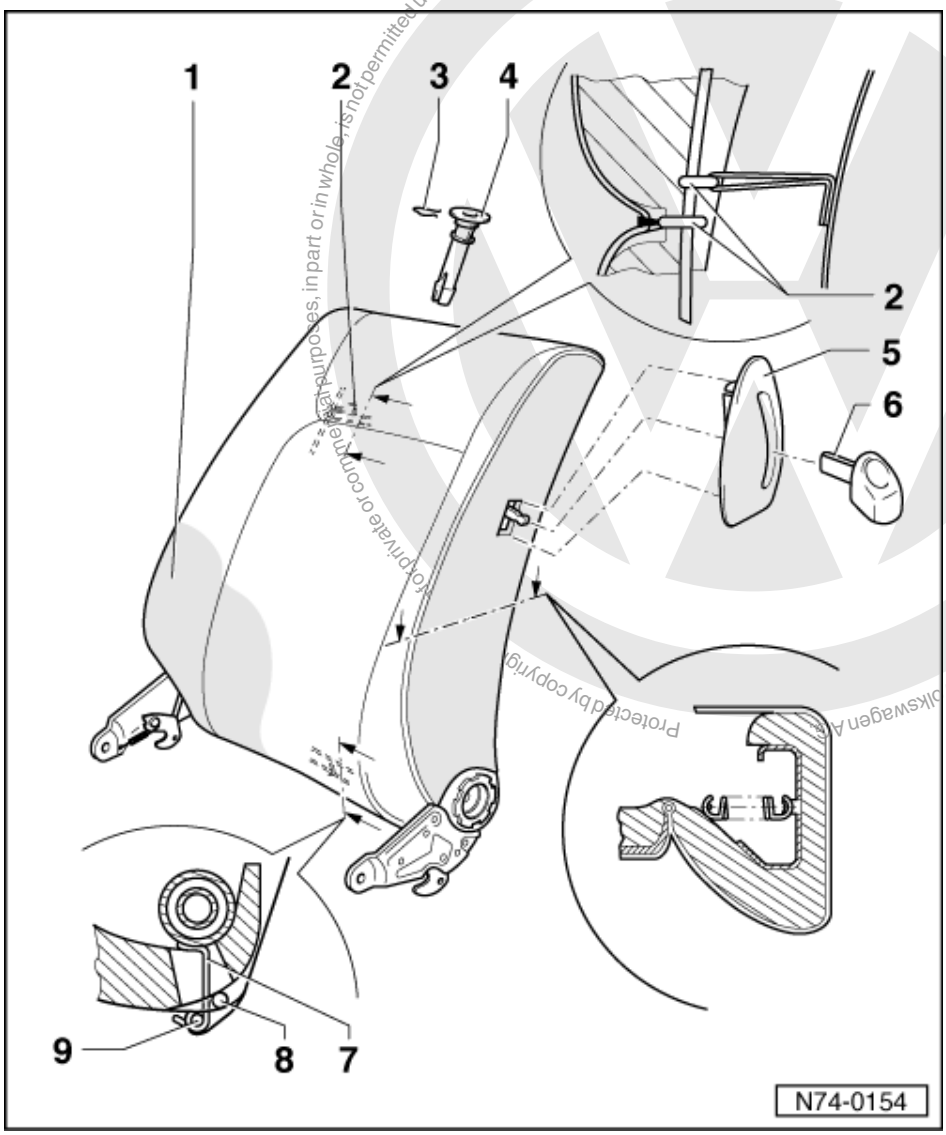

4 Guide
- To remove, push cover up, squeeze ends of guide together and pull out

5 Trim
- Pull off

6 Release knob
- Pull off

7 Cover hooking tabs

8 Padding wire
- Tensions cover on front of backrest

9 Padding wire
- Tensions cover on front of backrest

satelettronica

Removing cover and padding

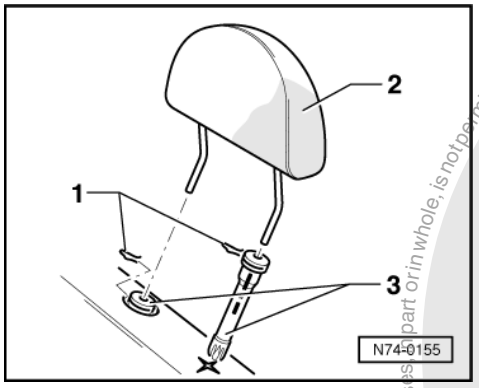

- Remove backrest => Page 162 .
- -> Lever out securing clips -1- and pull head restraint -2- out from guides -3-.

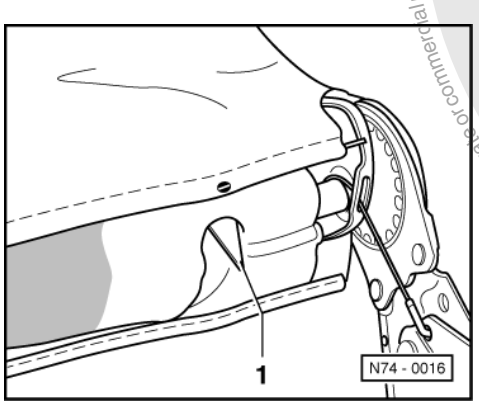

- -> Open out hook ends -1-.
- Pull cover off hook ends.

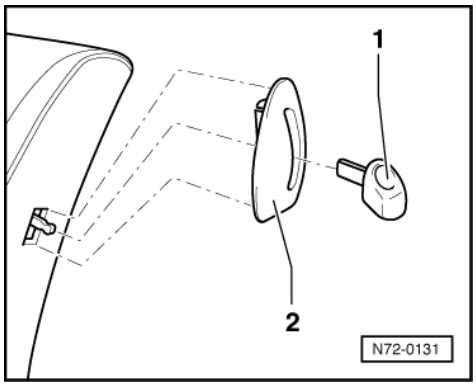

- -> Pull off backrest release knob -1-.
- Pull off trim -2-.

Protected by copyright. Copying for private or commercial purposes, in part or in whole, is not permitted unless authorised by Volkswagen AG. Volkswagen AG does not guarantee or accept any liability with respect to the correctness of information in this document. Copyright by Volkswagen AG.
satelettronica

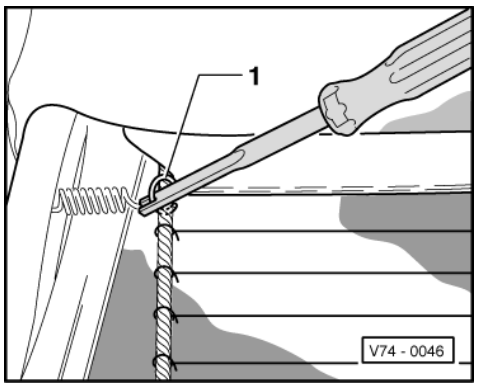

- -> Pull up backrest cover up to padding wire -1-.
- Unhook padding wire -1- (on back of backrest) with help of awl V.A.G 1636.
- Unhook padding wire (on front of backrest) with help of awl V.A.G 1636.

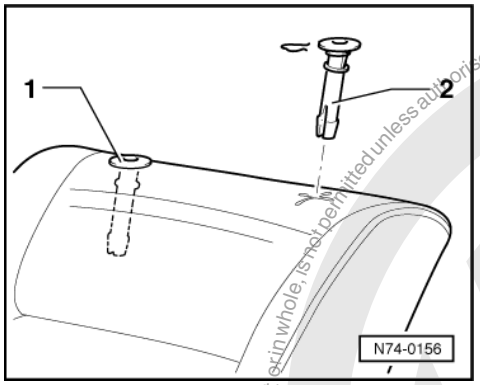

- -> Press lower ends of guides -1- and -2- for head restraints together and pull out from backrest frame.
- Take backrest cover and padding off backrest frame.

Pulling on cover and padding

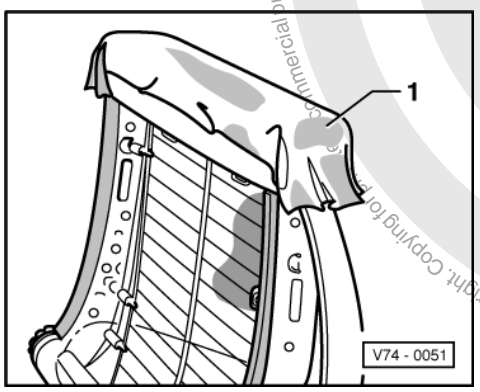

- Place slip material and padding onto backrest frame.
- -> Place slip material -1-, to ease pulling on of cover, onto padding upper edge.
- Heat backrest cover to approx. 30 °C for easier assembly.

Protected by copyright. Copying for commercial purposes, part or in whole, is not permitted unless authorised by Volkswagen AG. Volkswagen AG does not guarantee or accept any liability with respect to the correctness of information in this document. Copyright by Volkswagen AG.
satelettronica

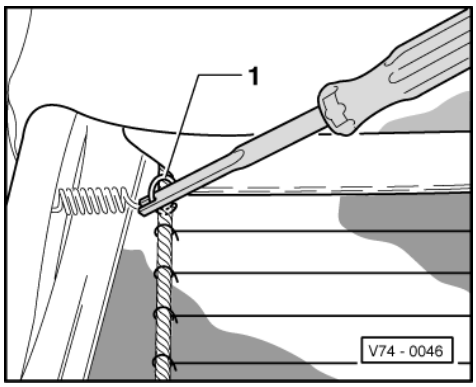

- -> Pull backrest cover on until ends of padding wire -1- can be guided through padding and hooked onto backrest frame.
- Pull backrest cover on completely.

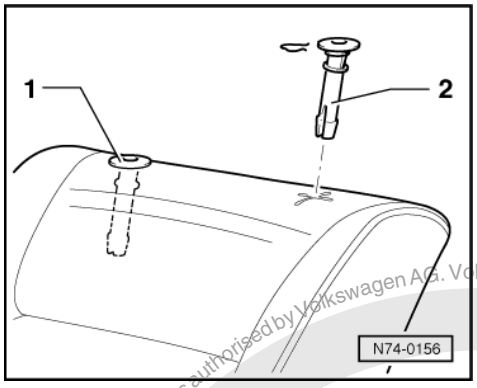

- -> Fit guides -1- and -2- for head restraints (insert clips into guides beforehand).

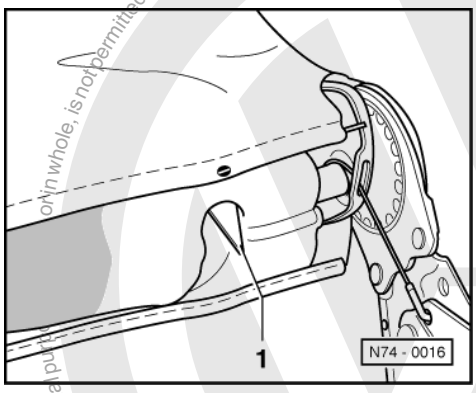

- -> Hook front of cover onto hook points -1- first followed by the rear, then bend hook points over.

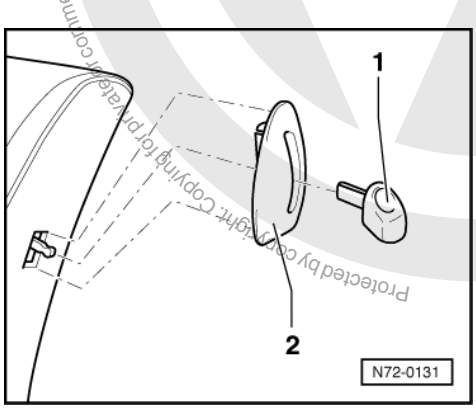

- -> Install trim -2- and release lever knob -1-.

satelettronica
Protected by copyright. Copying for private or commercial purposes, in whole, is not permitted unless authorised by Volkswagen AG. Volkswagen AG does not guarantee or accept any liability with respect to the correctness of information in this document. Copyright by Volkswagen AG.

- Install head restraints.

1.4 - Removing and installing front backrest cover and padding (Polo Classic, Polo Estate)

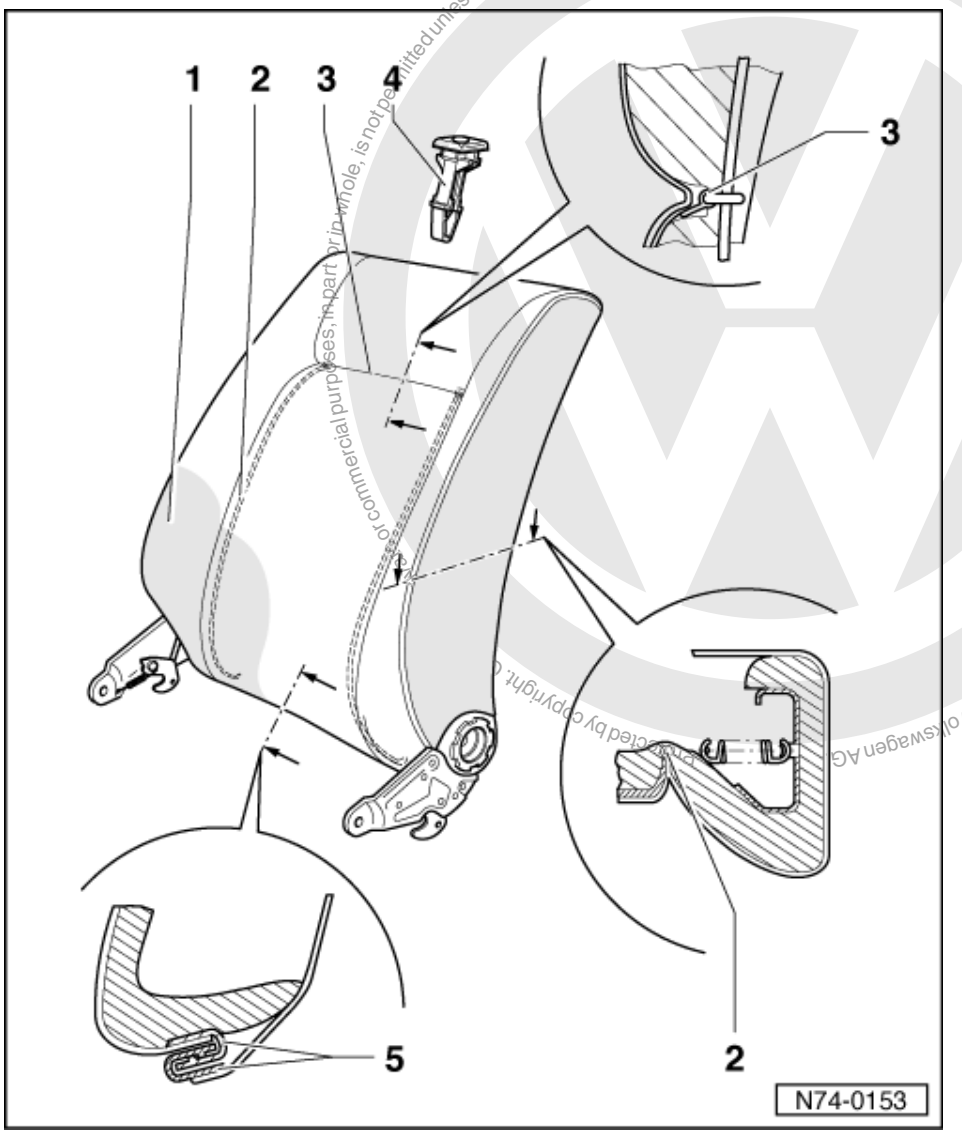

1 Cover
- ◆ Removing:
- Removing backrest => Page 162 .
- Remove cover and padding => Page 187 .
- ◆ Pulling on => Page 189 .

2 Cover tensioning wire

3 Padding wire
- ◆ Connected in padding; disconnect and connect with V.A.G 1636
- ◆ On sport seats, additionally secured with padding clamps

satelettronica

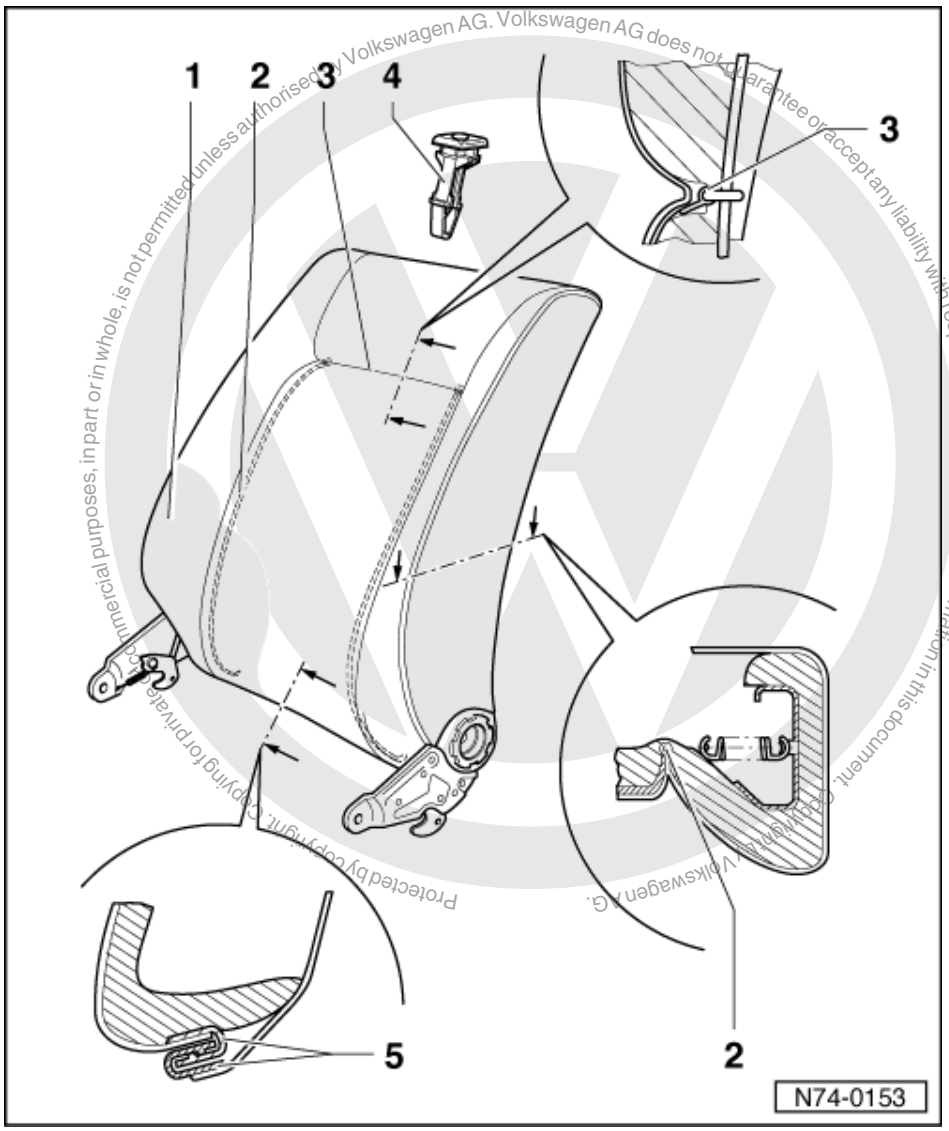

Protected by copyright. Copying for private or commercial purposes, in part or in whole, is not permitted unless authorised by Volkswagen AG. Volkswagen AG does not guarantee or accept any liability with respect to the correctness of information in this document. Copyright by Volkswagen AG.

4 Guide
- To remove, push cover up, squeeze ends of guide together and pull out

5 Clip section

Removing cover and padding

- Remove backrest => Page 162 .

satelettronica

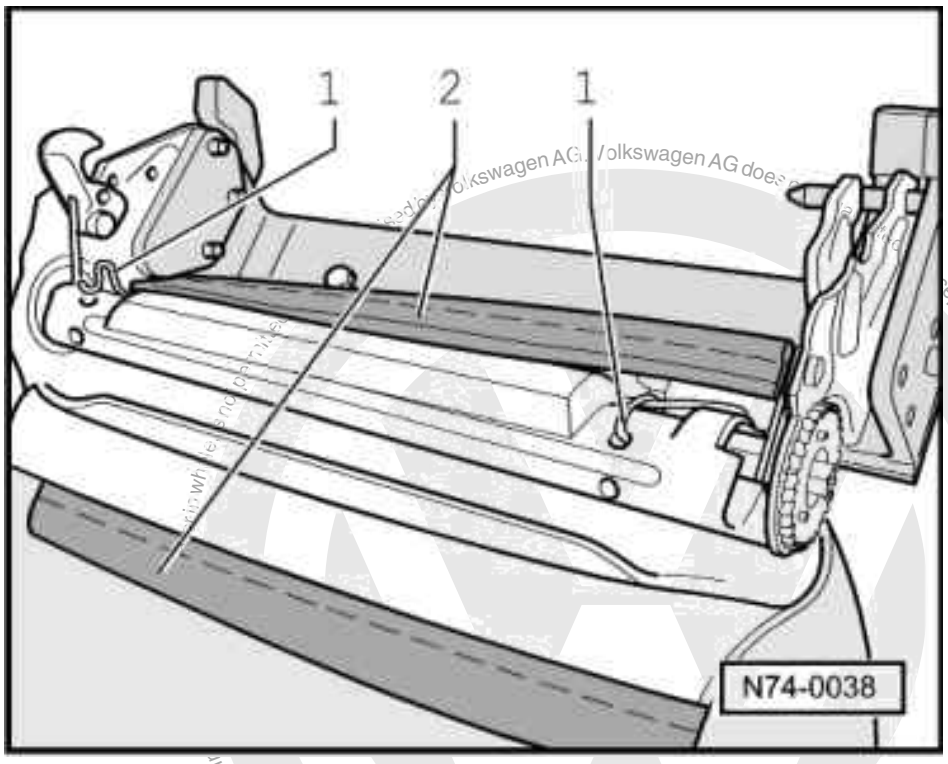

- Remove head restraint from backrest.
- -> Separate clamping profiles -2- from underside of backrest.
- Unhook tensioning wire -1- (only sport seat).

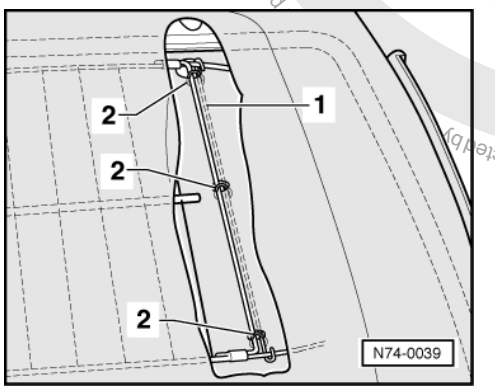

- -> Pull up backrest cover up to padding wire -1-.
- Cut through padding clips -2-.
- Unhook padding wire -1- with help of awl V.A.G 1636.

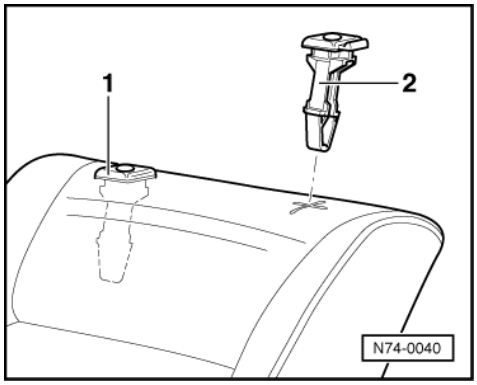

- -> Press lower ends of guides -1- and -2- for head restraints together and pull out from backrest frame.

satelettronica

- Take backrest cover and padding off backrest frame.

Pulling on cover and padding

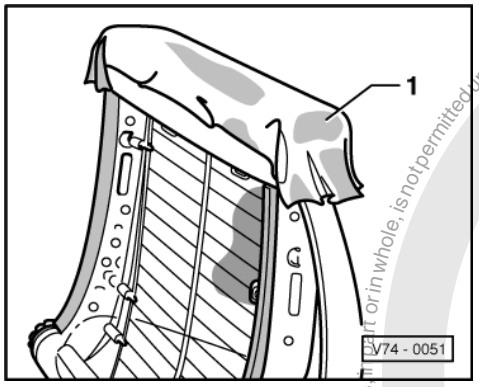

- Place slip material and padding onto backrest frame.
- -> Place slip material -1-, to ease pulling on of cover, onto padding upper edge.
- Heat backrest cover to 30 °C for easier assembly.

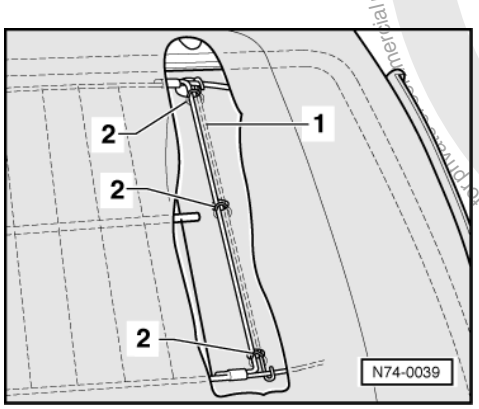

- -> Pull backrest cover on until ends of padding wire -1- can be guided through padding and hooked onto backrest frame.
- Fit padding clips -2- (if part of original equipment) using padding clip pliers V.A.G 1634 (sports seat only).
- Pull backrest cover on completely.

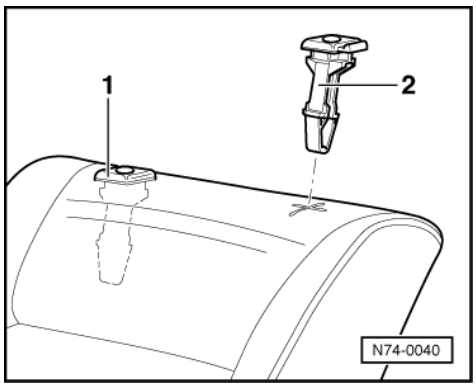

- -> Fit guides -1- and -2- for head restraints (guide -2- with press button on left side when facing forwards).

Protected by copyright. Copyright by Volkswagen AG. Volkswagen AG does not guarantee or accept any liability with respect to the correctness of information in this document. Copyright by Volkswagen AG. Commercial processing in part or in whole, is not permitted unless authorised by Volkswagen AG.
satelettronica

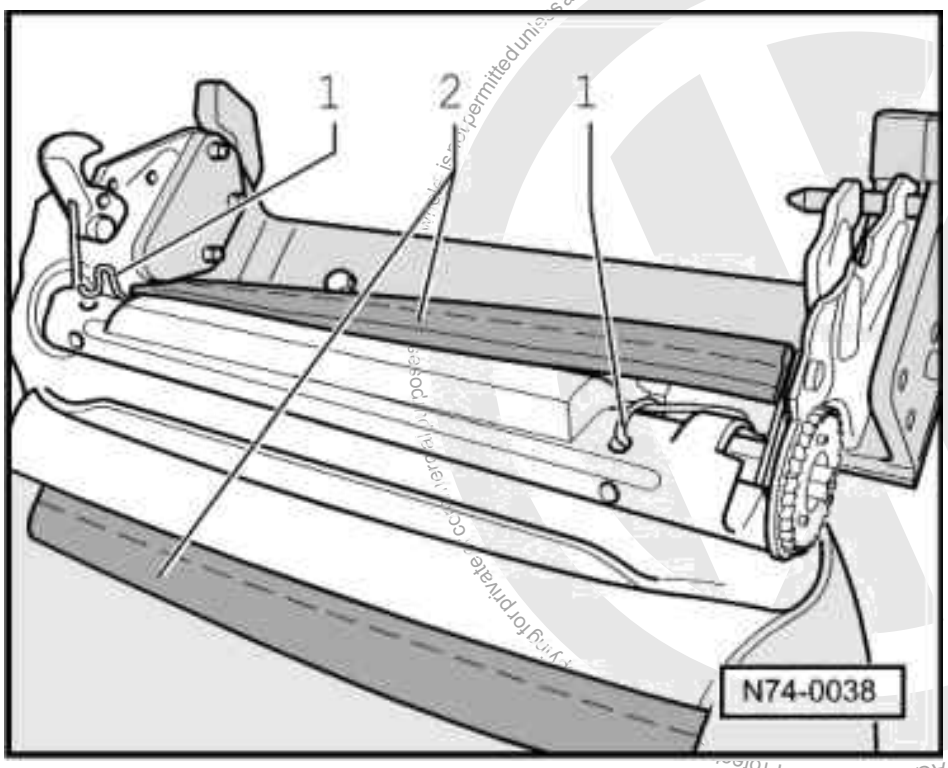

- -> Hook in tensioning wire -1-.
- Connect clamping profile -2- to underside of backrest.

Protected by copyright. Copying for private or commercial purposes, in part or in whole, is not permitted unless authorised by Volkswagen AG. Volkswagen AG does not guarantee or accept any liability with respect to the correctness of information in this document. Copyright by Volkswagen AG.
satelettronica

2 - Rear seat cushion cover and padding

2.1 - Rear seat cushion cover and padding

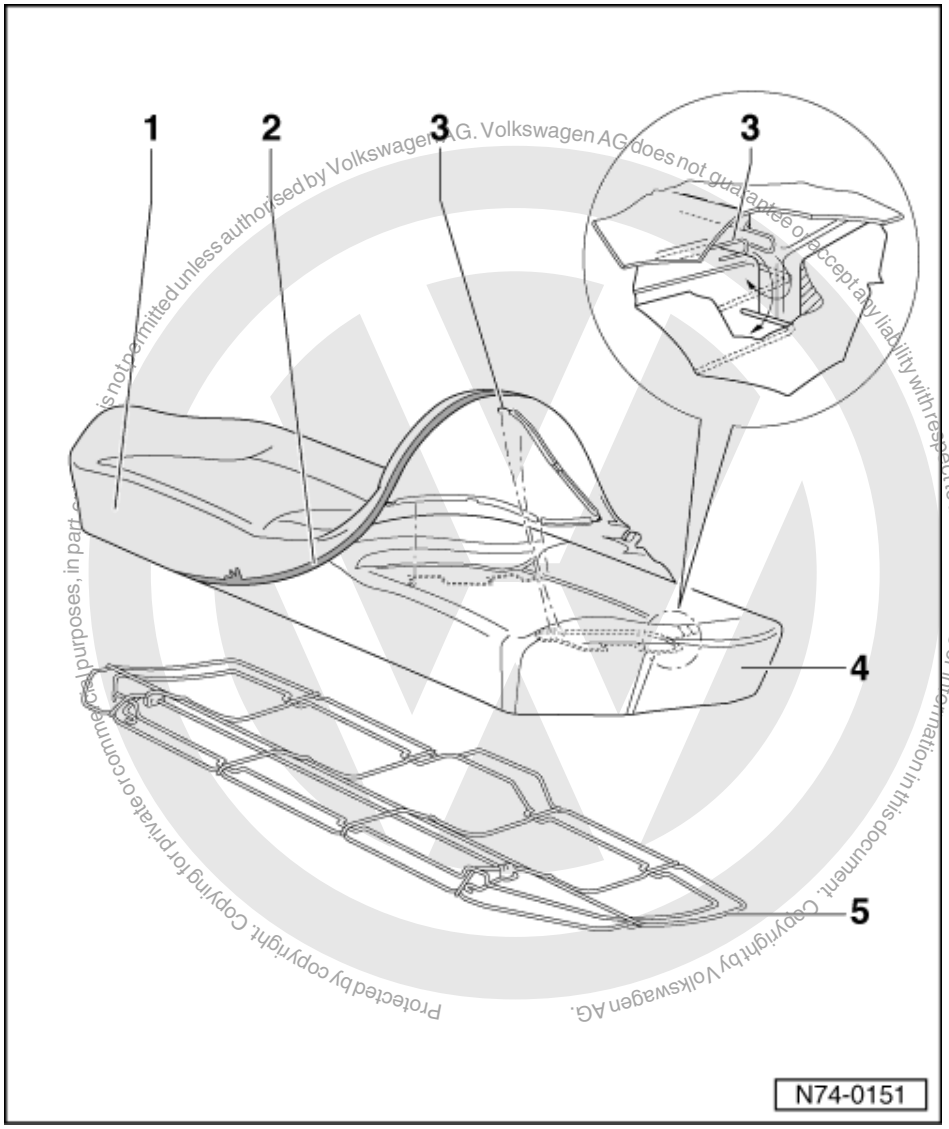

Protected by copyright. Copying for private or commercial purposes, in part or is not permitted unless authorised by Volkswagen AG. Volkswagen AG does not guarantee or accept any liability with respect to the correctness of information in this document. Copyright by Volkswagen AG.

2.2 - Removing and installing cover and padding for rear seat (one-piece)

1 Cover
- ◆ Removing:
- Unhook clamping profile - 2 - from padding wire.
- Unhook padding wire.

2 Clamping profile

3 Padding wire
- ◆ Connected in padding; disconnect and connect with V.A.G 1636

4 Padding

5 Wire frame

satelettronica

2.3 - Removing and installing cover and padding for backrest (one-piece)

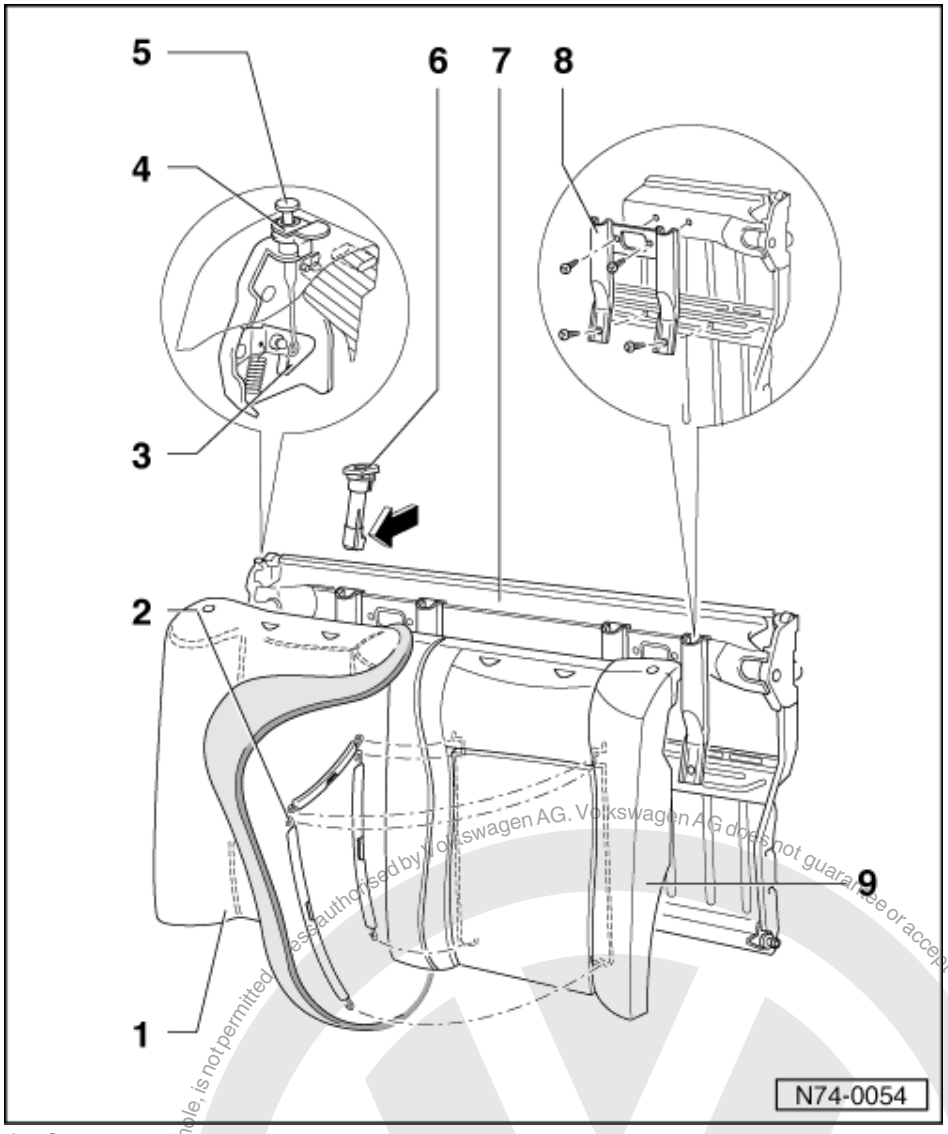

1 Cover
- Cover is secured to rear wall flange with a sewn-in clamping section

2 Padding wire
- Connected in padding; disconnect and connect with awl V.A.G 11636

3 Engaging hook

4 Trim plate

5 Pull rod

Protected by copyright. Copying for private or commercial purposes, in whole, is not permitted unless authorised by Volkswagen AG. Volkswagen AG does not guarantee or accept any liability with respect to the correctness of information in this document. Copyright by Volkswagen AG.
satelettronica

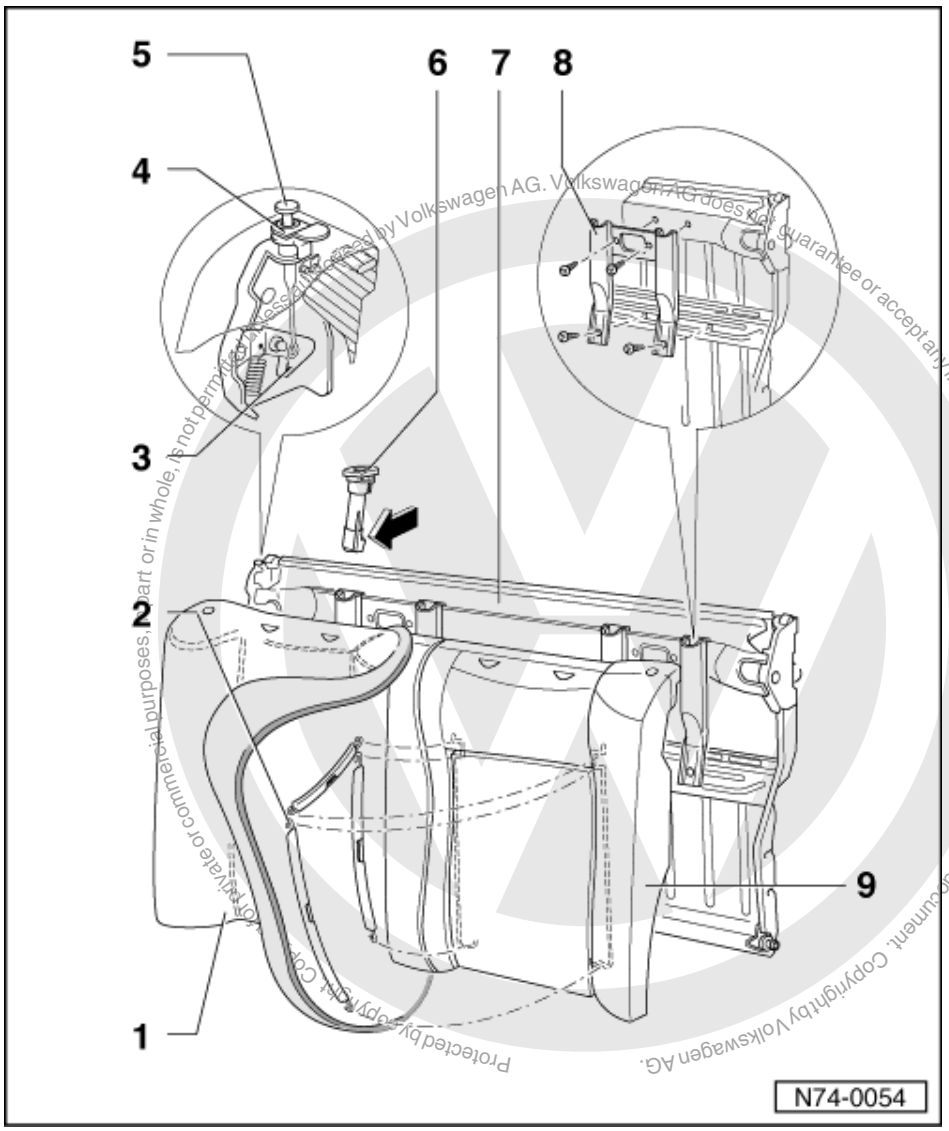

Protected by copyright. Copyright by Volkswagen AG. Volkswagen AG does not guarantee or accept any liability with respect to the correctness of information in this document. Copyright by Volkswagen AG. Not for private or commercial purposes, in part or in whole, is not permitted unless authorised by Volkswagen AG.

6 Guide
- To remove, detach seat cover from rear panel, grasp behind padding and below head restraint bracket, press lug on guide -arrow- and pull out guide.

7 Rear bulkhead

8 Head restraint bracket

9 Padding

satelettronica

2.4 - Removing and installing cover and padding for seat (split)

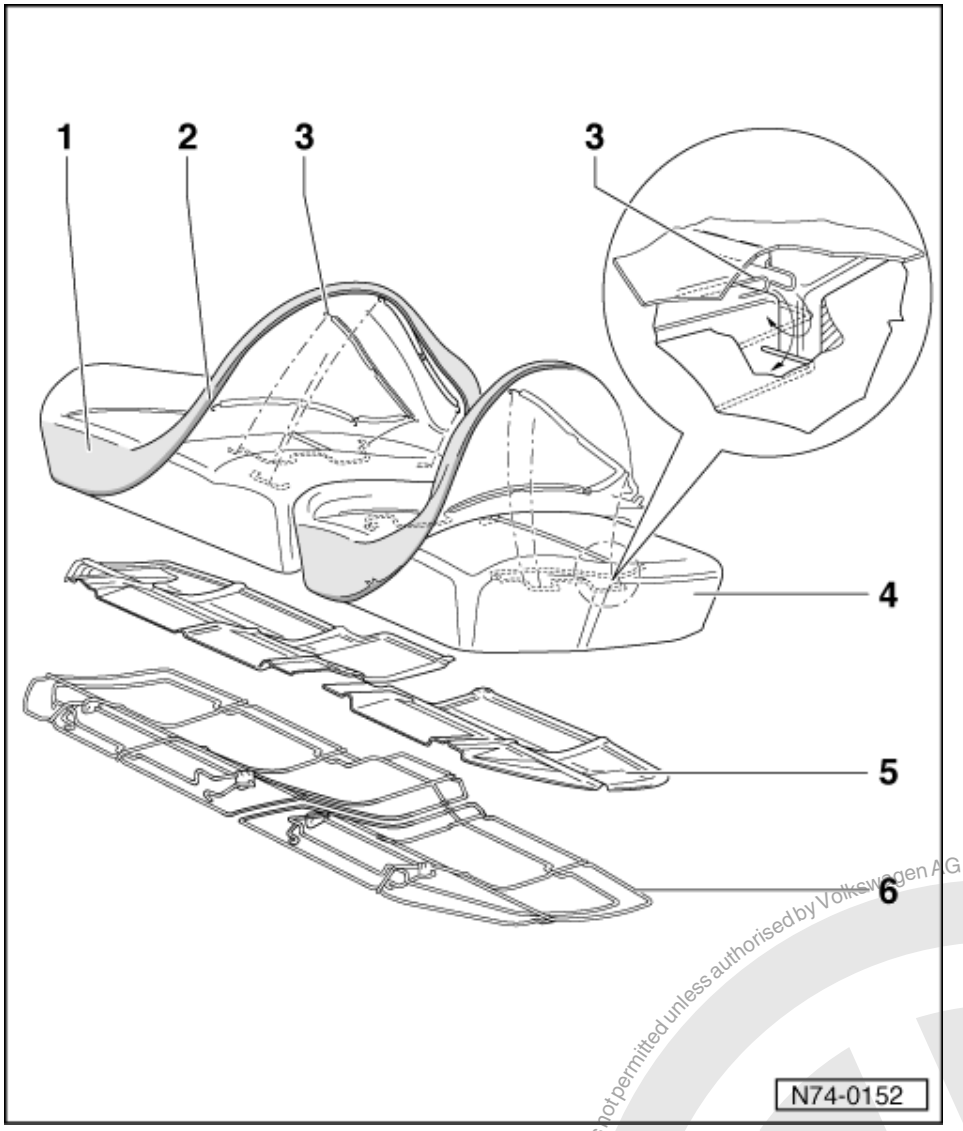

1 Cover
- Removing:
- Unhook clamping profile - 2 - from padding wire.
- Unhook padding wire.

2 Clamping profile

3 Padding wire
- Connected in padding; disconnect and connect with V.A.G 1636

4 Padding

5 Intermediate panel

6 Wire frame

satelettronica
Protected by copyright. Copying for private or commercial purposes, in part or in whole, is not permitted unless authorised by Volkswagen AG. Volkswagen AG does not guarantee or accept any liability with respect to the correctness of information in this document. Copyright by Volkswagen AG.

2.5 - Removing and installing covers and padding for backrest (split)

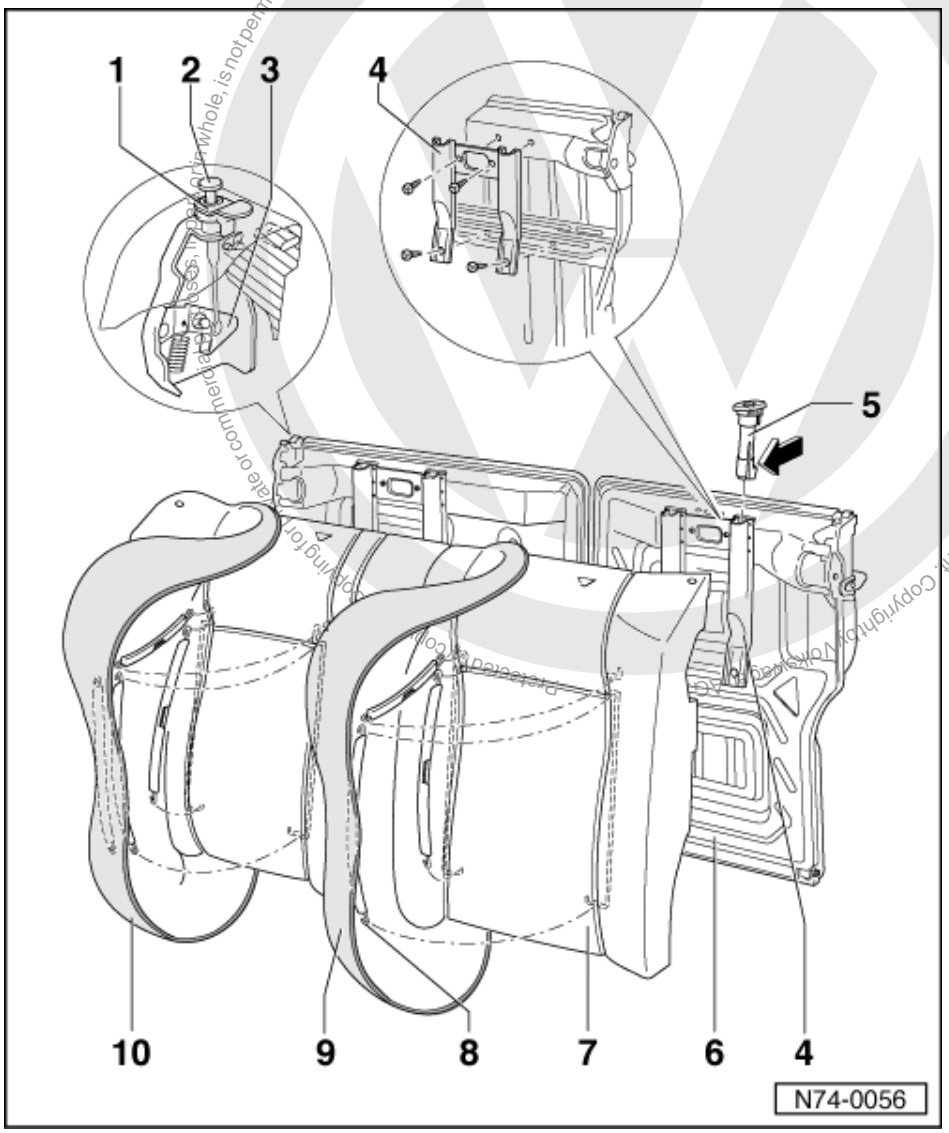

1 Trim plate
2 Pull rod
3 Engaging hook
4 Head restraint bracket
5 Guide
- To remove, detach seat cover from rear panel, grasp behind padding and below head restraint bracket, press lug on guide -arrow- and pull out guide.

6 Rear bulkhead
7 Padding

satelettronica

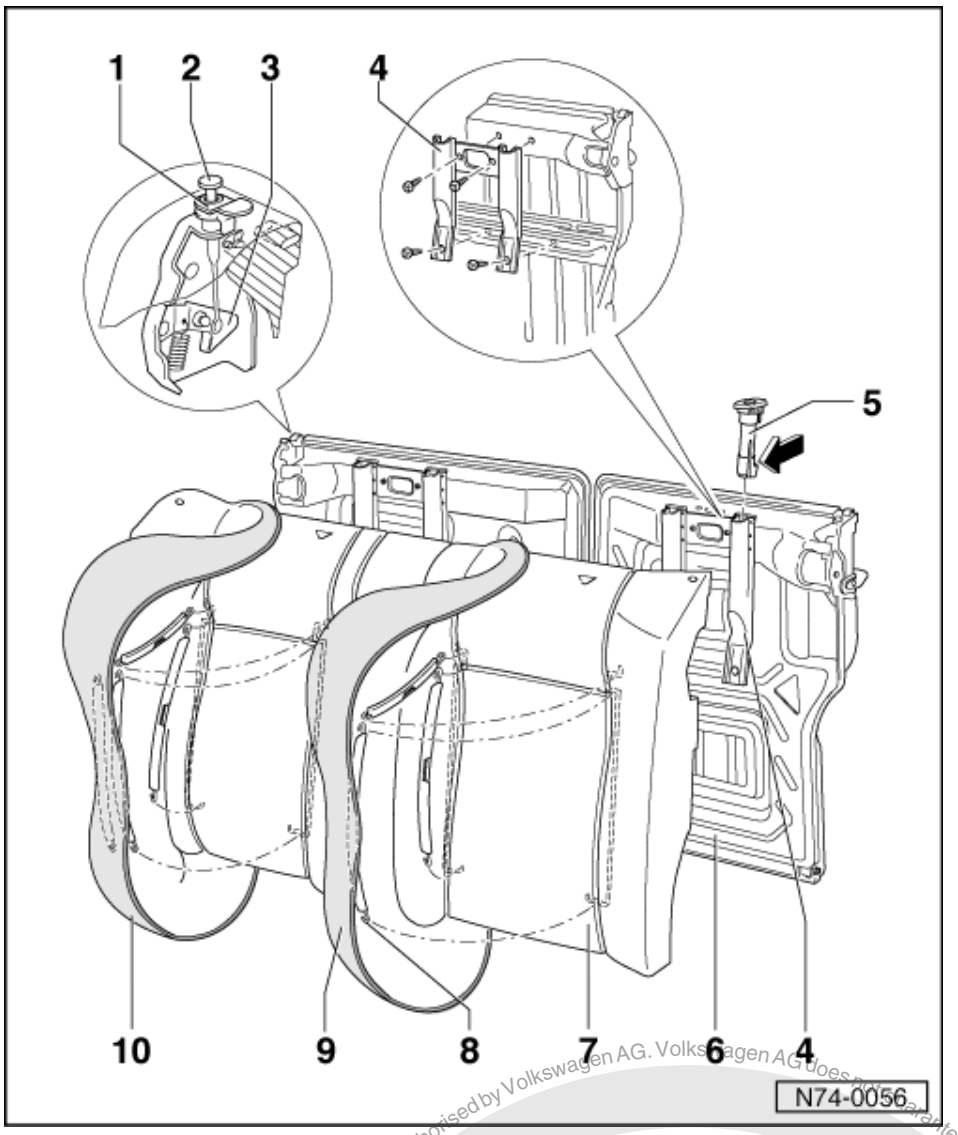

8 Padding wire
- Connected in padding; disconnect and connect with V.A.G 1636

9 Seat cover (single seat)
- Cover is secured to rear panel flange by the integrated securing profile

10 Seat cover (double seat)
- Cover is secured to rear panel flange by the integrated securing profile

Protected by copyright. Copying for private or commercial purposes, in part or in whole, is not permitted unless authorised by Volkswagen AG. Volkswagen AG does not guarantee or accept any liability with respect to the correctness of information in this document. Copyright by Volkswagen AG.
satelettronica